MT-9500 Operations Manual

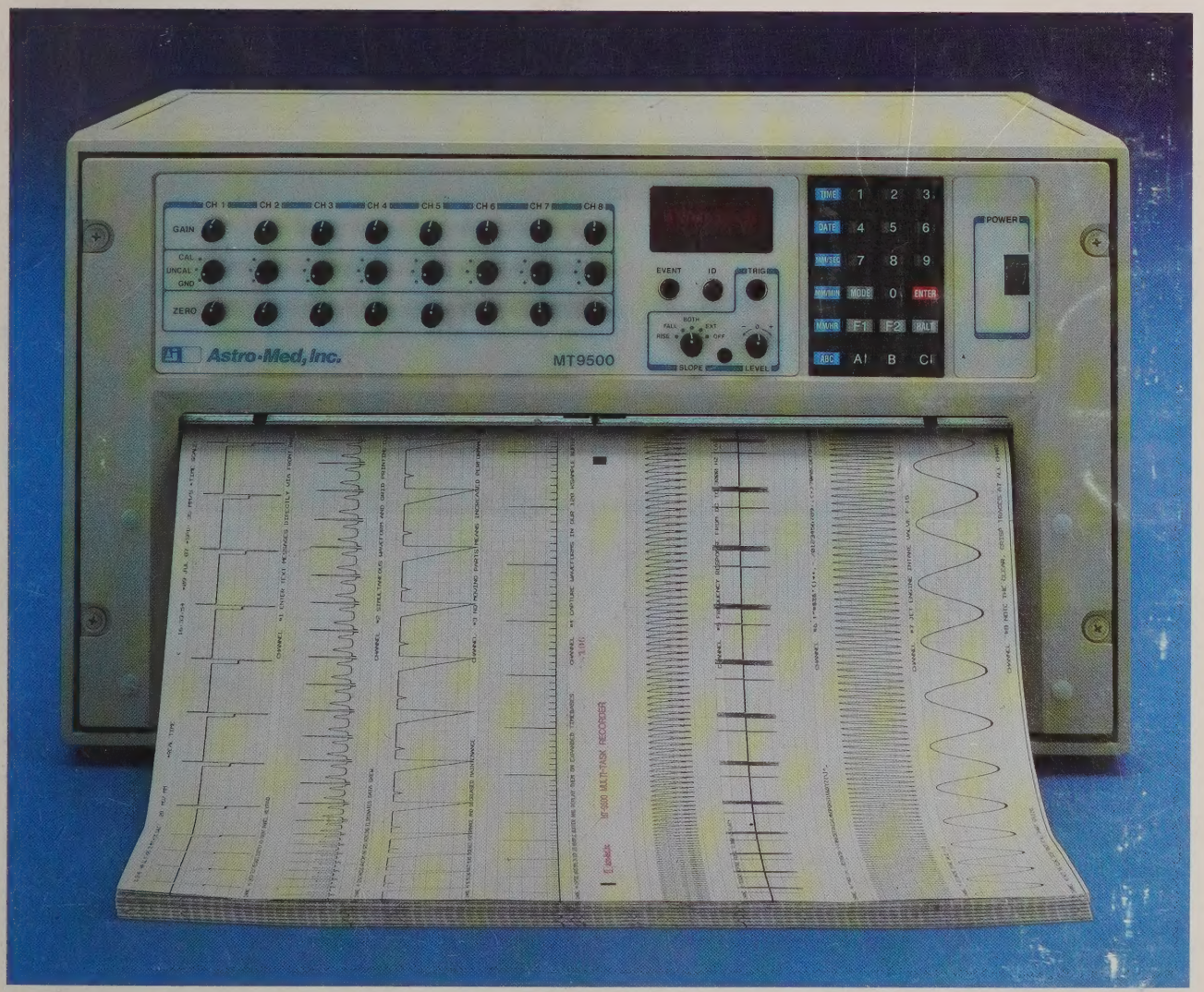

Astro-Med, Inc.

Digitized by the Internet Archive
in 2025

https://archive.org/details/manualsplus_09171

MT-9500 Operations Manual

Astro-Med
Part Number
22834-095

Serial Number: _____

Issued To: _____

© Copyright 1987, 1988

This manual is copyrighted with all rights reserved. No part of this manual may be reproduced, transmitted, transcribed, stored in a retrieval system, or translated into any language in any form by any means without written permission of Astro-Med, Inc. Printed in the United States of America.

Limited Warranty

Astro-Med warrants this hardware product against defects in materials or workmanship for a period of two years from the date of original purchase. If you discover a defect, Astro-Med will, at its option, repair or replace this product at no additional charge except as set forth below. Repair parts and replacement products will be furnished on an exchange basis and will be either reconditioned or new. All replaced parts become the property of Astro-Med.

This warranty does not apply if the product has been damaged by accident, abuse, misuse, or misapplication; or has been modified without the written permission of Astro-Med.

To obtain warranty services, send your product, freight prepaid, to our factory at: Astro-Med Industrial Park, West Warwick, Rhode Island, 02893. Call (401) 828-4000 for further information. Astro-Med is not responsible for your product if it is lost or damaged in transit.

Astro-Med makes no warranty, either express or implied, with respect to this product's fitness for a particular purpose.

Printed in the United States of America

Recorder Identification Data

Congratulations. Your Astro-Med purchase is an investment in the finest of state-of-the-art recorder technology. The information provided below lists the model number, serial number, and firmware version of your recorder. Verify that the software configuration number (SCN) that appears on the LED display of your recorder after it has been powered-up exactly matches the firmware version given below. The firmware version recorded below is the most current firmware version available for your recorder. As noted below, the firmware version number represents the firmware as originally installed in your instrument. Any upgrades of the recorder's resident firmware should be noted in the space provided. If, for any reason, it should be necessary for you to contact Astro-Med regarding your purchase, please refer to the following:

Model Number:_____

Serial Number:_____

Firmware Version:_____
(original installation)

Upgraded Firmware Version:_____
(date installed: ___/___/___)

Upgraded Firmware Version:_____
(date installed: ___/___/___)

Upgraded Firmware Version:_____
(date installed: ___/___/___)

Astro-Med, Inc.
Astro-Med Industrial Park, West Warwick, Rhode Island 02893 1 (800) 343-4039

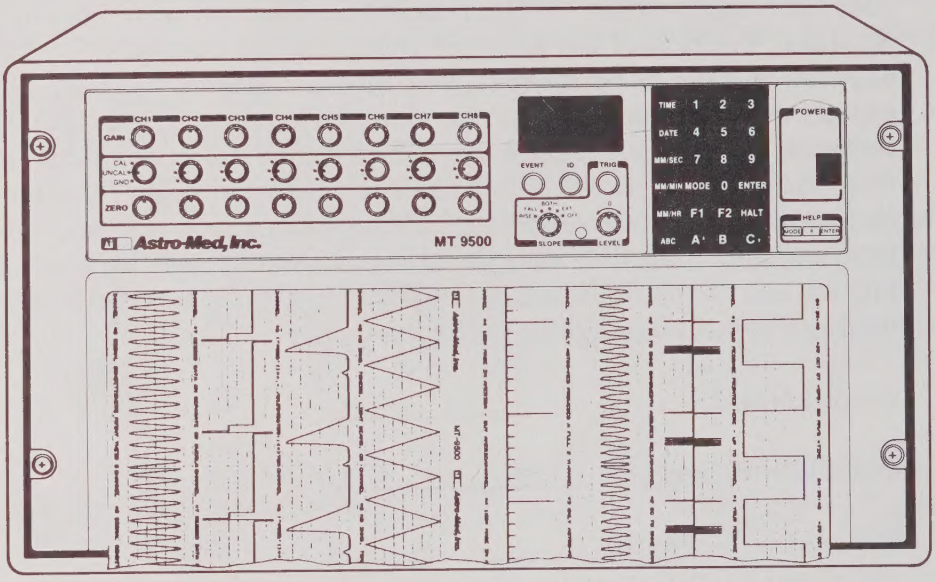

The Astro-Med MT-9500 Recorder

Table of Contents

		Page
Quick Guide to Recorder Operation		QG-1
1	**Introduction**	1-1
1-1	About This Manual	1-1
1-2	Highlights of Recorder Operation	1-1
1-2.1	General Real-Time Recording Features	1-2
1-2.2	General Data Capture and Playback Features	1-3
1-3	Recorder Configurations	1-4
1-4	MT-9500 Physical/Functional Specifications	1-5
1-5	Options	1-5
1-6	Accessories	1-5
1-6.1	LED Display (LA-95)	1-12
1-6.2	Rewinder (RW-95)	1-13
1-6.3	Writing Table (WT-95)	1-14
1-6.4	Paper Take-Up Drawer, Rack Mount (PT-200)	1-15
1-6.5	Roll-Around Cart (RC-95)	1-15
1-6.6	Travel Case (AN-95)	1-16
1-6.7	Rack Enclosures	1-16
1-6.8	Test and Calibration Diskette	1-16
1-7	Getting Started	1-17
2	**Installation**	2-1
2-1	Setup Upon Receipt	2-1
2-2	Installation Alternatives	2-5
2-2.1	Astro-Med Rack-Mount and Case Enclosures	2-6
2-2.2	Recorder Without Case	2-6
2-2.3	Recorder in an Astro-Med Enclosure	2-6
2-2.4	Recorder in Customer-Furnished Enclosure	2-8
2-2.5	Recorder and Rewinder Without Case	2-14
2-2.6	Recorder and Rewinder in Astro-Med Rack-Mount or Case Enclosure	2-15

2-2.7 Recorder and Rewinder in Customer-Furnished Rack-Mount or Case Enclosure 2-17
2-2.8 Attachment of Writing Table (WT-95) to Recorder 2-17
2-2.9 Using the LA-95 With the Recorder 2-19
2-2.10 Paper Take-up Drawer in Astro-Med Enclosure 2-20
2-2.11 Paper Take-up Drawer in Customer-Furnished Enclosure 2-21

2-3 Line Voltage Selection 2-21

3 Operation 3-1

3-1 General Information 3-1
3-2 Front Panel Controls and Indicators 3-1

3-2.1 Data-Entry Keypad 3-3
3-2.2 Signal-Adjustment Group 3-9
3-2.3 LED Display 3-10
3-2.4 EVENT and ID Pushbuttons 3-10
3-2.5 Trigger Definition Group 3-11
3-2.6 Power Switch 3-13

3-3 Rear Panel Input/Output Connections 3-13

3-3.1 Power Input Receptacle 3-15
3-3.2 Auxiliary AC Power Receptacle 3-16
3-3.3 Fan Vent 3-16
3-3.4 LA-95 (Aux Display) 3-16
3-3.5 Analog Input 3-16
3-3.6 "Talking" Signal Conditioner 3-17
3-3.7 IRIG Options 3-17
3-3.8 IRIG Input 3-18
3-3.9 Utility Port 3-19
3-3.10 Serial Port (RS-232 Interface) 3-20
3-3.11 IEEE-488 Port 3-21
3-3.12 CH1 Through CH8 BNC Connectors 3-21
3-3.13 Run 3-22
3-3.14 Event 3-22
3-3.15 Trig 3-22
3-3.16 Trimmer Potentiometers 3-22

3-4 Recorder Setup 3-25

3-4.1 Loading Z-Fold Thermal Paper 3-25
3-4.2 Loading Roll Thermal Paper 3-29
3-4.3 Time and Date: Setting the Recorder's Internal Clock and Calendar 3-36
3-4.4 Entering Operational Modes 3-38

3-5 Real-Time Operation 3-38

3-5.1 Real-Time Recording Setups 3-39

3-5.1.1 Time Setup 3-39
3-5.1.2 Date Setup 3-39
3-5.1.3 Speed Setup 3-42
3-5.1.4 Insta-Speed Setups 3-42
3-5.1.5 Timed Operation Setup 3-43
3-5.1.6 Event or Annotation Setup 3-45
3-5.1.7 Annotation Entry Setup 3-47
3-5.1.8 Signal Conditioner Print Status Setup 3-52
3-5.1.9 Channel Order Setup 3-53
3-5.1.10 Grid Printing On/Off Setup 3-54
3-5.1.11 Signal Polarity Reverse Setup 3-55
3.5.1.12 Real-Time Motor Speed Source Setup 3-56
3-5.1.13 Set Communications Type Setup 3-57
3-5.1.14 Set Factory Defaults Setup 3-60
3-5.1.15 Define Snapshot Sample Rate Clock Source Setup 3-60
3-5.1.16 Setup Summary 3-61

3-5.2 Eight-Channel Real-Time Recording: Mode 0 3-62
3-5.3 Overlap Real-Time Recording: Mode 1 3-67
3-5.4 Dual Speed Real-Time Recording: Mode 4 3-72
3-5.5 Datalogger Real-Time Recording: Mode 9 3-82

3-6 Data Capture/Playback Operation 3-90

3-6.1 Data-Capture Recording Setups 3-91

3-6.1.1 Acquisition Setup 3-91
3-6.1.2 Playback Setup 3-94
3-6.1.3 Trigger Channel and Location Setup 3-95

3-6.1.4 Trigger On/Off Setup 3-97
3-6.1.5 X and Y Channel Select Setup 3-98

3-6.2 Acquire Single Snapshot: Mode 5 3-99
3-6.3 Playback Single Snapshot: Mode 6 3-101
3-6.4 Continuous Snapshot (Untriggered): Mode 2 3-103
3-6.5 Continuous Snapshot (Triggered): Mode 3 3-105

4 Theory of Operation 4-1

4-1 Major Electronic Components 4-1

4-1.1 System Control 4-1
4-1.2 Data Acquisition 4-3
4-1.3 Print Engine 4-3

4-2 Recorder Self-Test 4-3
4-3 Software Package (Copyrighted) 4-4
4-4 Principles of Direct Thermal Recording 4-5

4-4.1 Strobe and Strobe Length 4-5
4-4.2 Energy Control Mechanisms 4-6

4-5 Chart Drive 4-7
4-6 Top of Form 4-9
4-7 Interlock 4-11
4-8 Real-Time Analog Recording: Analog Section 4-11
4-9 Real-Time Analog Recording: Data Acquisition 4-13

4-9.1 Waveform Sampling 4-13
4-9.2 Min/Max 4-13
4-9.3 Frequency Response 4-16

4-10 Resolution 4-17

4-11 Time Annotation 4-19

4-11.1 Real-Time Clock 4-19
4-11.2 External Time Codes 4-21
4-11.3 Sychronizing the Start of the System Log 4-21

4-12 Data Capture 4-22

4-12.1 Sample Rate 4-22
4-12.2 Capacity 4-23
4-12.3 Triggering 4-23
4-12.4 Playback 4-25

4-13 Calibration of Datalogger 4-25

4-14 Host Control 4-26

Appendix A: ASC-900 Series Signal Conditioner Specifications A-1

Appendix B: Commonly Ordered Spare Parts B-1

Appendix C: Schematics and Drawings C-1

Appendix D: Hardcopy of Test/Calibration Diskette Contents D-1

Acronyms and Abbreviations

Index

List of Illustrations

Figure	Caption	Page
QG-1	Example of Condensed Operations Manual	QG-3
1-1	LA-95 Accessory (LED Display)	1-12
1-2	RW-95 Accessory (Rewinder)	1-14
1-3	WT-95 Accessory (Writing Table)	1-14
1-4	PT-200 Accessory (Paper Take-Up Drawer)	1-15
2-1	Example of Rack-Mount/Recorder Installation Relationship	2-9
2-2a	Rack Slide Assembly (faces enclosure side)	2-10
2-2b	Rack Slide Assembly (faces recorder)	2-10
2-2c	Rack Slide Assembly Adjustment	2-10
2-2d	Attaching Rack Slide Front to Enclosure	2-11
2-2e	Attaching Rack Slide Rear to Enclosure	2-11
2-2f	Attaching Recorder to Enclosure	2-13
2-3	Attaching Writing Table Mounting Brackets	2-18
2-4	Mounting LA-95 to Enclosure	2-19
3-1	MT-9500 Front Panel Controls	3-2
3-2	Front-Panel Keypad	3-4
3-3	MT-9500 Rear Panel Connections	3-14
3-4	Rear-Panel Trimmer Potentiometers	3-23
3-5	Loading the Recorder With Z-Fold Thermal Paper	3-26
3-6	Loading the Recorder With Roll Thermal Paper	3-30
3-7	Sample Chart: Eight-Channel Real-Time Recording	3-63
3-8	Sample Chart: Overlap Real-Time Recording	3-68
3-9	Sample Chart: Datalogger Recording	3-83
4-1	Major Electronic Components	4-2
4-2	Simplified Circuit Diagram	4-8
4-3	Simplified Timing Diagram	4-8
4-4	Emitter/Sensor Circuit Assembly	4-10
4-5	Analog Input Channel	4-11
4-6	Sampling State Diagram	4-14
4-7	Worst-Case Frequency Response	4-16
4-8	Schematic of Real-Time Clock and Battery Circuits	4-20
4-9	MT-9500 Trigger Circuitry	4-24

List of Tables

Table	Title	Page
1-1	MT-9500 Physical/Functional Specifications	1-6
1-2	Options for the MT-9500 Recorder	1-10
1-3	Accessories for the MT-9500 Recorder	1-11
2-1	MT-9500 Error Codes On Wake-Up	2-4
3-1	MT-9500 Modes of Operation	3-7
3-2	MT-9500 Function Commands	3-8
3-3	Recorder Real-Time Setups	3-40
3-4	Factory Default Real-Time Setups	3-41
3-5	Editing Interchannel Buffers: ASCII Codes and Character Equivalents	3-49
3-6	Data-Capture Setups	3-92
3-7	Factory Default Data-Capture Seups	3-92

Quick Guide to Recorder Operation

Please note that Astro-Med's MT-9500 oscillographic recorder is protected by U.S. Patent 4,739,344. Foreign patents are pending.

If you are an experienced user of oscillographic recorders or an adventurer who just likes to jump right in, this quick guide will acquaint you with some of the basic operations of the MT-9500 recorder. The quick guide is not meant to be a substitute for the full Operations Manual. You must read the Operations Manual to get the maximum performance from your new recorder. The quick guide will give you a glimpse at a few of the recorder's sophisticated capabilities. Have fun and take a look. When you begin to see the MT-9500's versatility, you will want to familiarize yourself will the rest of this manual to take full control of this extraordinary, new-technology instrument.

Setup the Recorder

1. **When you have unpacked your recorder and have it in place, connect the AC power cord:**

   - *first to the rear-panel power input receptacle (lower left corner of the rear panel as you view it)*
   - *then to a power outlet.*

2. **Open the paper-chamber door and load the recorder with Z-fold thermal chart paper. Put the paper pack into the paper chamber with the "THIS SIDE UP AND IN FIRST" stamp pointing to the rear of the recorder. Feed the top sheet of paper into the slot beneath the rubber covered driver roller (platen) and gently push the paper through until it exits above the drive roller. Close the paper-chamber door. (If you wish, see section 3, paragraph 3-4.1 for a detailed description of this procedure.)**

3. **Push the POWER switch into the "on" position . The recorder will perform a series of self-tests during which the front-panel LED display will show <SELFTEST>, <PASSED>, <SCN xx.x>, and <READY>. Your recorder is ready to operate when <READY> appears on the front-panel LED display.**

If you want to test the functioning of the waveform recording capabilities of your MT-9500, you can do so now. The simplest way to accomplish this is to use BNC cables to connect one or more (to a maximum of eight) signal sources to the recorder's rear-panel analog-input BNC connectors (see 3-3.12). These connectors are labeled "CH8," "CH7," etc.

See your signal conditioner manual for detailed information regarding signal conditioner/recorder connections. You should be aware that the MT-9500 is available with either of two basic analog input sensitivities. The recorder's standard A/D circuit board has a factory-set full-scale sensitivity range of ±200 mV to ±2.5 V. An optional A/D circuit board with a full-scale sensitivity range range of ±2 V to ±5 V is available.

Ask The Recorder For Help

Your recorder will give you a one page, built-in "Condensed Operations Manual" any time you ask for one. The condensed manual is very handy because it contains a great deal of valuable information. Among other things, it tells you all current parameter settings, function and mode keying sequences, operating guidelines, and firmware options installed. Lets take a look at a condensed manual.

1. **Press the [MODE] key.**

2. **Press the [8] key.**

3. **Press the [ENTER] key.**

When you press [ENTER], *the LED display reads* <HELP>. *The recorder immediately form-feeds a blank sheet of chart paper and then prints a dual-sheet condensed manual. Among other things, the condensed manual will tell you the factory-installed options that your recorder contains. Check it to verify that you have received everything that you ordered. When it's finished printing, the recorder returns to a neutral state and the LED display reads* <READY>. *Figure QG-1 is a sample Condensed Operaations Manual.*

MT-9500 CONDENSED OPERATIONS MANUAL

(Refer to your manual for complete instructions)

OPERATION DESIRED:	HOW TO ACTIVATE:	NOW PROGRAMMED:
1. REAL TIME MODES		
8 CHANNEL REAL TIME RECORDER	[MODE] [0] [ENTER]	-----
OVERLAP REAL TIME RECORDER	[MODE] [1] [ENTER]	-----
DUAL SPEED OPERATION*	[MODE] [4] [ENTER]	OFF TIME 1:00:00 SPD 1:025 MM/S TIME 2:00:00 SPD 2:050 MM/S
DATALOGGER	[MODE] [9] [ENTER]	
	CH1 LS=+0200 EE=+0;	RS=-0200 EE=+0
	CH2 LS=+0200 EE=+0;	RS=-0200 EE=+0
	CH3 LS=+0200 EE=+0;	RS=-0200 EE=+0
	CH4 LS=+0200 EE=+0;	RS=-0200 EE=+0
	CH5 LS=+0200 EE=+0;	RS=-0200 EE=+0
	CH6 LS=+0200 EE=+0;	RS=-0200 EE=+0
	CH7 LS=+0200 EE=+0;	RS=-0200 EE=+0
	CH8 LS=+0200 EE=+0;	RS=-0200 EE=+0
2. REAL TIME SET UPS:		
TIME	[TIME] [HH MM] [ENTER]	14:30:08
DATE	[DATE] [MM DD YY] [ENTER]	02/04/88
SPEED	[MM/Y] [X] [ENTER]	025 MM/S
INSTA-SPEED BUTTONS	[ABC] [MM/Y] [X] [ENTER]	A=001 MM/S B=025 MM/S C=050 MM/S
TIMED OPERATION*	[F2] [3] [ENTER]	OFF
EVENT OR ANNOTATION	[F1] [2] [ENTER]	AAAAAAAA
ANNOTATION ENTRY*	[F2] [0] [ENTER]	See next page
SIGNAL CONDITIONER PRINT STATUS	[F2] [8] [ENTER]	NNNNNNNN
GRID PRINTING ON/OFF	[F1] [1] [ENTER]	ON
CHANNEL ORDER SET	[F1] [0] [ENTER]	12345678
SIGNAL POLARITY REVERSE	[F1] [7] [ENTER]	NNNNNNNN

****

OPERATION GUIDELINES:

HALT KEY

Besides starting and stopping the MT-9500, the [HALT] key is used as an ESCAPE key when programming various modes and set ups. If you get "stuck" in any menu, simply press [HALT] to escape.

MISCELLANEOUS

* Several functions offer a number of choices. To see them, press either the [A] or [C] keys. When the format you want appears in the display, press [ENTER]. Modes or functions that require the [A] or [C] key are marked on this sheet with an (*) asterisk.

Several of the functions listed are optional. If an option is not ordered, the MT-9500 will display "NOT USED" for functions related to the option.

Figure QG-1. Example of Condensed Operations Manual

OPERATION DESIRED:	HOW TO ACTIVATE:	NOW PROGRAMMED:
3. DATA CAPTURE MODES		
AQUIRE SINGLE SNAPSHOT	[MODE] [5] [ENTER]	-----
PLAYBACK SINGLE SNAPSHOT	[MODE] [6] [ENTER]	-----
CONTINUOUS SNAPSHOT (untriggered)	[MODE] [2] [ENTER]	-----
CONTINUOUS SNAPSHOT (triggered)	[MODE] [3] [ENTER]	-----
4. DATA CAPTURE SET UPS:		
ACQUISITION*	[F1] [6] [ENTER]	CHANNELS: 8 WINDOW: 08 K/CH TMEBSE:001MS/MM
PLAYBACK*	[F1] [4] [ENTER]	FORMAT: X-Y START AT:99% EXPANSION:25X
TRIGGER CHANNEL AND LOCATION*	[F1] [3] [ENTER]	TRIGGER ON: CH 1 WINDOW:START
TRIGGER ON/OFF	[F2] [4] [ENTER]	ON
X AND Y CHANNEL SELECT	[F1] [5] [ENTER]	X=1 Y=2
5. EXTERNAL CONTROL FUNCTIONS:		
LOCAL OR HOST CONTROL SET*	[F2] [6] [ENTER]	LOCAL

6. OPTIONS INSTALLED IN THIS RECORDER:

AP-95 DC-95
RD-95 EM-95
IRIG OM-95
DL-95 DI-488-95

****

ANNOTATION GUIDELINES:

Text annotation is entered by first pressing [F2] [ENTER]. Now enter the channel number (1-8), [ENTER]. The display now contains this message: 00 67 C. This means you are looking at location 00, at which there is an ASCII code 67, which is an upper case "C". To step through the buffer, press [C] to advance, or [A] to reverse. To jump quickly to a location, press [ABC] then the location [00-99], [ENTER]. When editing is completed, press [ENTER]. If you edit the middle of a word or sentence, press [HALT] to escape, since pressing [ENTER] erases anything to the right of what is in the display.

The ASCII codes supported by local text entry are as follows: (x) indicates character not shown on display.

32	(space)	45	-	58	: (x)	71	G	84	T
33	! (x)	46	.	59	; (x)	72	H	85	U
34	"	47	/	60	< (x)	73	I	86	V
35	# (x)	48	0	61	=	74	J	87	W
36	$	49	1	62	> (x)	75	K	88	X
37	%	50	2	63	?	76	L	89	Y
38	&	51	3	64	@	77	M	90	Z
39	'	52	4	65	A	78	N	91	[
40	((x)	53	5	66	B	79	O	92	\ (x)
41	) (x)	54	6	67	C	80	P	93	]
42	*	55	7	68	D	81	Q	94	^ (x)
43	+	56	8	69	E	82	R	95	_
44	,	57	9	70	F	83	S		

Figure QG-1. Example of Condensed Operations Manual (continued)

Try Some Real-Time Recording

1. **Press the [MODE] key on the recorder's front-panel keypad.**

   When you press the [MODE] *key, the LED display reads* <8 CH RT> *indicating that the MT-9500 is ready to begin eight-channel real-time recording.*

2. **Press the [ENTER] key.**

   The recorder immediately begins recording eight channels of real-time analog waveform data. The MT-9500 has numerous factory-set default operational parameters that you can alter. Right now, the recorded charts will reflect the factory default parameter settings. When the MT-9500 begins recording, the front-panel LED display will show the time in 24-hour format. (You may need to set the clock to the correct time. That process is described a little further below.)

3. **If you want to stop the recorder while it is operating, press the [HALT] key.**

   The LED display will read <HALTED>. *Chart paper will stop coming out of the recorder and the instrument will wait in a neutral state.*

4. **If you want to resume recording, press the [HALT] key again.**

   Again, the recorder will immediately begin to perform eight-channel real-time recording. The LED display will show a time reference in 24-hour format.

5. **Let's suppose you have noticed some data that interests you and you would like to mark the chart quickly to examine the data later. Press the front-panel EVENT pushbutton.**

   The recorder automatically prints an event marker on the far right side of the chart as viewed from the front of the instrument. When you press the EVENT pushbutton, the event marker deflects to the left and stays deflected until you release it. This is a fast, simple method to note interesting data.

6. **Want to stop the recorder and exit the eight-channel real-time mode (Mode 0)? If so, press the [HALT] key and then press [ENTER]. If the recorder is already halted, just press the [ENTER] key.**

   The recorder will stop running and the LED display will read <READY> *indicating that MT-9500 is ready for another use.*

Try A Little More Recording

If your recorder is equipped with the Overlap option (OM-95), you can easily overlap the eight individual channels of analog waveforms in two channels each containing four waveforms. Let's see what overlapped recording looks like.

1. **Press the [MODE] key.**

2. **Press the [1] key. Notice that the LED display reads <OVLAP RT> indicating overlap real-time recording.**

3. **Press the [ENTER] key.**

   The recorder immediately begins to produce two groups of over lapped waveforms with four channels in each group.

   You can quickly and easily identify each waveform by pressing the front-panel ID pushbutton. Each time you press the ID button, the recorder marks each waveform with its channel number. You never have to be confused by an overlapping chart.

4. **Press the [HALT] key to stop the recorder and press the [ENTER] key to exit the mode while halted. You can always use the [HALT] / [ENTER] sequence to exit the mode.**

If your recorder is equipped with the Datalogger option (DL-95), you can have your analog waveform data converted and played out as engineering units of your choice. Use the steps below to have the recorder produce datalogger charts.

1. **Press the [MODE] key.**

2. **Press the [9] key. Notice that the LED display reads <DATA LOG> indicating that you are about to enter the Datalogger mode.**

3. **Press the [ENTER] key.**

   The recorder immediately produces eight columns of numbers instead of analog waveforms.

4. **Use the [HALT] / [ENTER] sequence to exit the mode.**

Set The Recorder's Clock and Calendar

It is easy to set the recorder's clock and calendar to the current time and date. This will give all of the recorder's functions an accurate time reference.

1. **To set the clock:**

   - press the [TIME] key on the front-panel keypad
   - press any four numeric keys on the keypad to represent the current time in 24-hour (24:00) format.

     In 24-hour format, midnight has a value of 24:00 and noon has a value of 12:00. So, for example, 1:00 am would be 01:00 in 24-hour format. 2:45 pm would be 14:45, etc.

   - press the [ENTER] key

2. **To set the calendar:**

   - press the [DATE] key
   - press any six numeric keys (use leading zeros as necessary) on the keypad to represent the current date in standard American form: month/day/year (mm/dd/yy)
   - press the [ENTER] key

Get Caught Speeding

You can change the chart-paper speed anytime during real-time recording. You can also make use of three "insta-speeds" that you can program and invoke when you desire. Let's try altering chart-paper speed.

1. **Press [MODE] and then [ENTER] to start eight-channel real-time recording.**

2. **While the recorder is either running or halted, press the [MM/SEC] key on the front-panel keypad. Notice that the LED display shows the current speed in millimeters per second, <MM/S>.**

3. **Press up to three numeric keys to represent the chart speed in millimeters per second that you want. Currently, a maximum speed of 200 mm/s is standard on the MT-9500. A maximum speed of 500 mm/s is available as an option.**

4. **Press the [ENTER] key.**

   The chart paper immediately begins to run at the speed you just programmed.

If you desire, customize the settings of the [MM/MIN] and [MM/HR] keys in the same way.

You can also make use of three preset insta-speeds. These are accessed through the [A], [B], and [C] keys of the front-panel keypad. Whenever you are recording in real-time, just press any of these keys to change chart paper speeds. The [A], [B], [C] keys are preset to speeds of 1, 25, and 50 mm/s respectively. You can change them to speeds of your preference by following the steps below.

1. **While the recorder is either halted or running in a real-time mode, press the [ABC] key. This is the single key with three letters on it.**

   The LED display will read <A, B OR C>.

2. **Press the individual insta-speed key, [A], [B], or [C], that you want to reprogram.**

3. **Press either the [MM/MIN] or [MM/HR] keys if you want your charts to run in millimeters per minute or hour instead of millimeters per second. The recorder is preset to run charts in millimeters per second.**

4. **Press any three numeric keys to specify the new speed you want to enter.**

5. **Press the [ENTER] key. The insta-key you chose has been reprogrammed. If you desire, follow the same procedure to change the other insta-speed keys.**

Annotate Your Charts

There is space for an annotation buffer between each of the recorder's eight channels. If your recorder has the Alphanumeric Printing option (AP-95), you can enter 100 characters of text into each of these individual interchannel buffers to custom "label" them or annotate them in any way that is useful to you. You can annotate interchannel buffers in any of three ways:

- with Astro-Med's optional keyboard accessory (KB-220)
- through the controls of a host computer
- through the recorder's front-panel keypad

Let's use the front-panel keypad to enter some text into an interchannel buffer.

1. **Press the [F2] key and notice that the LED display reads <EDIT CH>. You are about to edit a buffer by entering it and changing its content.**

2. **Press the [ENTER] key and the display reads <BUFFER ?>. What buffer do you want to edit? Let's try buffer 1. Press numeric key [1].**

3. **The LED display now reads <BUFFER 1>. Press the [ENTER] key to access the buffer. The display changes when you press [ENTER] and now reads <00 67 C>. Eachbuffer is preset to print a channel label: "CHANNEL 1," "CHANNEL 2," etc.**

<00 67 C> is actually just a simple message. The recorder is telling you that you have arrived at location 00 of buffer 1. This is the first location of the buffer. (Each buffer has a hundred buffer locations from 00 to 99.) The second number, 67, tells you that ASCII code 67 is in buffer location 00. The third character, C, is the letter that ASCII code 67 stands for. This character, C, will be printed in the buffer 1 at location 00.

The idea is that you can access each buffer location and put in the letter, number, or symbol of your choice. The only restriction is that you have to choose your alphanumerics from the list of ASCII codes and their character equivalents in the Condensed Operations Manual.

4. **Let's change the "C" in location 00 to a "T". Look at the list of ASCII codes on the Condensed Operations Manual and see that ASCII code 84 equates to the letter T. Press numeric keys [8] and [4]. Notice that the LED display has changed to read <00 84 T>. The letter T will now be printed as the first character in buffer 1.**

5. **Lets go to buffer 1 locations 01, 02, and 03 and change them to spell the word "TEST." To go to the next buffer location you can either press the [C] key to advance space by space through the buffer or press the [ABC] single key. (You can scroll backwards space by space through the buffer by pressing the [A] key.)**

   When you press the [ABC] *key, the display reads* <GO TO 00>. *Just press the number(s) of the location you want to go to. In this case press* [1] *and then press* [ENTER]. *When you press* [ENTER], *the LED display shows you buffer location 01 and the ASCII code and character currently there.*

   When you get to location 01, press numeric keys [6] *and* [9] *to enter ASCII code 69 in the location. This equates to the letter* <E>.

   Use either the [C] *or* [ABC] *key to go to location 02 in the buffer. Press keys* [8] *and* [3] *and the letter* <S> *is shown.*

   Use either the [C] *or* [ABC] *key to go to location 03 in the buffer. Press keys* [8] *and* [4] *and the letter* <T> *is shown.*

You have just spelled the word "TEST" in the first four character spaces of buffer 1. You can access every location of every channel in the same way. Just use the same procedure and edit away. When you're finished editing, press the [ENTER] *key and your data are entered and saved. If you press* [MODE] [ENTER] *and print some waveforms, you will see your annotations on the chart in buffer 1.*

About Taking A Data Snapshot

Your recorder needs the Data Capture option (DC-95) to capture, store, and replay waveform data (take a data snapshot). This option enables the recorder to store and replay a maximum of 128,000 sample points of waveform data.

The Data Capture mode is extremely powerful and useful. There are actually four data-capture modes. Because it can do so much, it is difficult to summarize its many features and the procedures by which they can be accessed and used. There is just too much information to be usefully abbreviated.

Instead, let's outline:

- the kinds of information you have to enter into the recorder to take a data snapshot and
- the format options available when captured data are replayed.

Before you can take a data snapshot, you have to tell the recorder:

- the conditions that will cause a snapshot to be taken
- the size of the snapshot you want taken
- the format in which you want the snapshot printed out

To do this, use the [F1] and [F2] function keys. If you press either the [F1] or [F2] keys and then successively press numeric keys [0] through [9], the LED display will show a variety of operational parameters. For data capture, the most important parameters include:

<DEF TRIG>	[F1] [3] [ENTER]
<DEF PLAYBACK>	[F1] [4] [ENTER]
<SET X - Y>	[F1] [5] [ENTER]
<DEF SAVE>	[F1] [6] [ENTER]
<TRIGGER>	[F2] [4] [ENTER]

These parameters let you:

- define the trigger
- define the playback
- select two channels to be presented as an X - Y plot or a two channel snapshot
- define the "save" (the snapshot window)
- turn the trigger on or off

When you have set all of these parameters, the recorder recognizes what you want captured and how you want the playback to look.

The MT-9500 can replay snapshots in any of four formats:

Eight separate channels of analog waveforms

X - Y plots of any two waveforms

Eight separate channels of numeric tables scaled from the analog waveform signals (DL-95 required)

Two wide grids each containing four overlapped waveforms (OM-95 required)

Let's take a look at one kind of data capture: continuous untriggered snapshots. In this mode the recorder will continuously capture and playback data snapshots according to the setups that you have established. Because we haven't defined any setups, the recorder will operate using factory-set defaults.

1. **Press [MODE].**

2. **Press the [2] key. Notice that the LED display reads <CON SS U> indicating that the recorder is about to enter the "continuous snapshot untriggered" mode.**

3. **Press the [ENTER] key. As soon as you press [ENTER], the LED display will read <ACQUIS> meaning that the recorder is performing a snapshot acquisition.**

   After the snapshot has been taken, the recorder will automatically replay the data. The LED will change to read <PLAYBACK>.

   After playback, the recorder will perform another acquisition and another playback. With each cycle, data from the previous capture is replaced by data from the new capture. This cycle will continue until you press [HALT].

   Halt the recorder any time by pressing the [HALT] key. Exit the mode by using the [HALT] / [ENTER] sequence. The LED display will read <READY> and the recorder will wait for further operating instructions.

Read Your Full Operations Manual

The MT-9500 makes all of its functions available with pushbutton ease. However, you do have to know what buttons to push and why you are pushing them. The Operations Manual has been written to give you this information clearly and concisely. Please take the time to read it as you acquaint yourself with your recorder. When you have read the manual, the recorder will become a powerful and versatile work partner.

Section 1
Introduction

1-1 About This Manual

The purpose of this manual is to provide you with all the information required to operate your Astro-Med Multi-Task MT-9500 recorder as a stand-alone instrument. Control of your recorder through a remote host computer is discussed in the MT-9500/MT-8800 Host-Control Operations Manual. Maintenance of your recorder is detailed in the MT-9500 Maintenance and Service Manual.

This manual discusses all of the functions, features, and capabilities of your recorder. Separate sections of the manual discuss recorder installation, operation, and theory of operation. Appendix C of the manual presents a group of schematic and dimensional diagrams.

1-2 Highlights of Recorder Operation

A true New-Technology recorder, Astro-Med's MT-9500 digitally processes incoming analog data with 12-bit accuracy. The recorder's high-resolution dual thermal printheads replace inks and mechanical styli. The elimination of mechanical components and inks results in printed waveforms that precisely reflect the original signals. Recording directly onto Z-fold thermal-paper packs or thermal-paper rolls, the printheads create any of several possible grids as they simultaneously print waveforms. The simultaneous printing of both waveform and grid results in total correlation between recorded waveforms and the selected grid. Chart drift error is simply eliminated.

Sampling analog-signal inputs at the rate of 30 kHz per channel, the recorder can represent signals as short as 200 microseconds. Uniform amplitudes and sharp waveform traces are recorded in each channel over the recorder's impressive DC to 5 kHz real-time frequency-response range.The MT-9500 uses a sophisticated crystal-referenced stepper motor drive system to advance the chart paper through the recorder. The stepper motor provides a wide variety of chart-paper speeds. Chart-paper speeds from 1 mm/ through 100 mm/hour, minute, or second can be selected. A maximum paper speed of 200 mm/s is standard on MT-9500 recorders. If ordered as an optional feature, an enhanced maximum chart-paper speed of 500 mm/s is available.

Uncommon versatility and user-friendliness result from your ability to toggle rapidly between the recorder's extensive functions. A digital data input connection eliminates any need for analog-to-digital (A/D) converters and, in host-control, permits recording of a maximum of 32 digital waveforms. Standard RS-232 and IEEE-488 ports facilitate control of most recorder capabilities either by host computer or by optional keyboard.

1-2.1 General Real-Time Recording Features

The MT-9500 is an exceptionally versatile digital, high-speed oscillographic recorder and data-capture system. The functions of the recorder are performed in either of two primary operational modes: *Real-Time Recording* or *Data Capture and Playback*. Operating with state-of-the-art electronics, high-resolution dual thermal printheads, and powerful proprietary software, the recorder is equipped with the following real-time operating modes:

Eight-channel, real-time recording. Produces eight 40 mm-wide channels of analog waveforms.

Dual-speed recording. Toggles between two predefined chart speeds.

Formfeed the chart paper. Advances chart paper to the next sheet.

Help mode. Produces an MT-9500 Condensed Operations Manual.

These capabilities can be greatly expanded by the addition of the options and accessories discussed throughout this manual and, in particular, in paragraphs 1-5 and 1-6. In all cases where option-dependent recorder modes and functions are discussed in this manual, the required options or accessories are clearly identified. A full description of real-time recorder operation is contained in paragraph 3-5.

Please be aware that this manual discusses all recorder modes and functions including all optional modes and functions. Your recorder will perform only the modes and functions for which it has been equipped. Obviously, if you have not ordered the required option, your recorder will lack the particular mode or feature being described.

1-2.2 General Data Capture and Playback Features

The data-capture mode requires installation of the Data-Capture option, DC-95.

The recorder is impressive in its capacity to capture and instantly replay transient data. In the data-capture mode, waveform data are stored in the MT-9500's 128k data-sample random access memory (RAM). When the memory is filled, data are printed at speeds much slower than the original signal. The result is a slow-motion waveform replay allowing thorough examination of high frequency waveform data.

Data capture results from either a user-initiated, on-demand "immediate snapshot" or from a user-defined, automatic "triggered snapshot."

Immediate-snapshot data capture is accomplished manually by pressing the front-panel trigger button.

Triggered-snapshot data capture is performed by adjusting the recorder's convenient front-panel slope and sensitivity controls to respond to a preset voltage and waveform edge. You can specify the capture of pre-trigger, post-trigger, or center-trigger data. In addition, you can specify window time, buffer size, 2 or 8 channel data format, and replay mode.

The data-capture modes are listed below. These modes and their associated functions are fully discussed in paragraph 3-6.

Acquire Single Snapshot. The recorder captures one snapshot.

Playback Single Snapshot. The recorder replays a single snapshot in any of several playback formats.

Continuous Untriggered Snapshot. The recorder continuously and automatically captures and prints snapshots without reference to triggers.

Continuous Triggered Snapshot. The recorder continuously and automatically captures and prints snapshots whenever user-defined triggers are detected.

1-3 Recorder Configurations

The MT-9500 recorder is generally furnished in one of the following three configurations:

MT-9500R Rack-mounting. The recorder is provided with the rack slides and mounting hardware required for installation in standard 19-inch rack-mount cabinets. No recorder case is provided with this model.

MT-9500 Cased. The recorder is installed in a protective, portable bench-top case.

MT-9500C Cased with card cage. The recorder and a companion signal conditioner card cage are provided in a configuration specifically designed to integrate both units in a single protective bench-top case.

Naturally, you are not limited to chosing from these three recorder configurations. Any combination of recorders, signal conditioners, cases, etc. can be ordered. When this manual refers to the "MT-9500", it is referring to the generic recorder and not to any particular recorder configuration.

All models of the MT-9500 recorder have the features listed below.

- Eight 50-division channels
- System channel
- One event marker
- Channel ID pushbutton
- IEEE-488 and RS-232 computer interfaces
- Nonvolatile random access memory (NVRAM) for backup of functions and text only
- Battery back-up for time and date
- Technical documentation supporting Operation, Maintenance, and Host-Control Operation
- Operating diskette for host-control operation
- Dual Speed Mode
- Condensed Operations Manual printout feature
- Full two-year warranty

1-4 MT-9500 Physical/Functional Specifications

Table 1-1 lists the principal physical and functional characteristics of the MT-9500 recorder.

1-5 Options

The versatility of the MT-9500 recorder can be enhanced by the addition of any of a variety of optional features. Table 1-2 is a complete list of options available for the recorder. The options listed below and their functions are discussed more fully in section 3 of this manual, "Operation." Hardware accessories for the instrument are discussed in paragraph 1-6, "Accessories."

1-6 Accessories

The MT-9500 is supported by a variety of functional, durable, and attractive hardware accessories. With the equipment discussed below, you can adapt your instrument to the specific requirements of your recording environment. Table 1-3 lists and briefly describes each accessory. Individual accessories are defined in greater detail in the subparagraphs that follow. Please consult the individual user manuals that are supplied with Astro-Med signal conditioners and signal-conditioner card cages for information regarding the use of these products with the MT-9500 recorder. Appendix A provides a list of Astro-Med signal conditioners and their specifications.

Table 1-1. MT-9500 Physical/Functional Specifications

Dimensions	Bench version: 20" (508mm) wide x 11-1/2" (292mm) high x 18-1/2" (470mm) deep Rack-mount version: 19" (483mm) wide x 10-1/2" (266.7mm) x 17-1/2" (445 mm) deep
Weight	65 pounds (29.5 kg)
Power Requirements	Line: 95 - 132 VAC 190 - 264 VAC 48 - 440 hertz* 600 watts *Consult factory for operation above 66 hertz. Fuse: 120 volts, 6 amperes (250 V) 240 volts, 3 amperes (250 V)
Recording Method	Direct-writing thermal array Resolution: 200 dots/inch across paper width
Paper	Low-cost, permanent, black-imaging thermal paper
Paper Width	15.3 inches (388 mm)
Paper Length	Z-Fold Pack: 500 sheets (458 ft/140 m), individually numbered in descending order Roll: 500 foot (Rewinder accessory required)
Trace Width	0.01 inch nominal (2 dots)
Paper Travel Direction	Top to bottom
Paper Exit	Front

Table 1-1. MT-9500 Physical/Functional Specifications (continued)

Number of Channels	Analog Waveform: 8 Digitized Waveforms (optional): 32 Alphanumeric Annotation (optional): 8 System Log: 1
Channel Grid Format (Analog)	Eight 40 mm or two 160 mm grids (optional) corresponding to mode selection. Printed simultaneously with waveform data.
Frequency Response	DC to 3 khz, down 1 dB DC to 5 khz down < 3 dB, full scale
A/D Resolution	12 bit
Analog Input	10 mV per division ±5 V full scale max without signal conditioners (optional)
Digitized Input (optional)	Digital input on rear panel. For complete information, see the MT-9500 Host Control Operations Manual.
Operating Modes	Real Time *(a)* 8 channels on individual 40 mm grids *(b)* 2 sets of 4 channels, each overlapped on two 160 mm grids (optional) *(c)* Datalogger numeric values of wave forms calibrated in user-specified engineering units (optional) Data Capture (optional) *(a)* On-demand "snapshot" from front panel pushbutton. *(b)* Transient capture triggered by voltage level external TTL low or switch closure.

Table 1-1. MT-9500 Physical/Functional Specifications (continued)

Operating Modes (continued)	*(c)* Memory size: 128k samples total (16k/channel for 8, 64k/channel for 2) Time base ranging from 1 to 100 ms/mm *(d)* Trigger/Window: variable from 1% to 100% for complete pre- or post-trigger viewing of data Memory type: circular buffer Resolution: 12 bit Data Playback Choices (optional) *(a)* 8 signals on separate 40 mm-wide grids *(b)* 4 signals overlapped on 160 mm-wide grids *(c)* Any 2 signals as X-Y plot *(d)* Datalogger numeric values of waveforms calibrated to your engineering units
System Log Channel	Automatically prints hour, minute, second, day, month, year, chart speed, and time scale in ms/mm. Prints recording mode on each page.
Annotation (optional)	8 annotation channels to identify waveforms. 100 character buffer provides 40 characters for signal conditioner reporting and 60 characters for customer use.
LED Waveform Display (optional)	Displays signal positions of all 8 channels Standard: 19"(483 mm) Rack mounting: 1.75"(44.4 mm) high
Event Markers	1 standard, 8 optional
IRIG Time Code (optional)	Accepts modulated or demodulated IRIG A,B,H, and NASA 36. Prints IRIG time (in place of internal clock) in system log channel
Computer Interfaces	RS-232 and IEEE 488

Table 1-1. MT-9500 Physical/Functional Specifications (continued)

Signal Polarity Inversion	Polarity reverse of channels controllable from the front panel
Front Panel Controls	*(a)* "Zero," "Gain," "Cal" for 8 waveform channels *(b)* "Help" keys print condensed operating instructions on demand *(c)* Event marker push-button *(d)* ID push-button to identify overlap or separate channels by number on the waveform *(e)* Data capture controls for "Trigger," "Slope," and "Level" *(f)* Keypad for setting time, date, speeds, text entry, modes, and functions. *(g)* Power On/Off
Paper Speeds	Every integer from 1 to 100 in mm/s, mm/min, mm/hr and 200 mm/s by means of a crystal-reference stepper motor. 500 mm/s available on special order.

Table 1-2. Options for the MT-9500 Recorder

Option	Description
DC-95	**Data Capture option**. This option provides memory for the acquisition and storage of 128,000 (128k) sample waveform-data points.
AP-95	**Alphanumeric Printing option**. This option provides eight 100-character text buffers for chart annotation and enables signal conditioner reporting.
EP-95	**Enhanced Performance option.** This option increases the waveform density that can be printed full scale simultaneously in all eight channels.
EM-95	**Event Marker option**. This option provides eight TTL-low/switch-closure event channels in addition to the recorder's standard single event marker capability (9 total).
OM-95	**Overlap Mode option.** This option allows the recorder's eight channels to be overlapped four each on two expanded grids.
OG-95	**Optional Grid.** This option provides 50-division grids in 8-channel mode instead of the recorder's standard 40-division grids.
IRIG-95	**IRIG option**. The IRIG option allows the recorder to decode modulated or demodulated IRIG A, B, H, or NASA 36 time codes and print text on chart.
DI-488-95	**Digital Interface option**. This option allows the recorder to accept and record a maximum of thirty-two digitized waveforms through its standard rear-panel IEEE-488 interface.
DL-95	**Datalogger option**. This option enables the recorder to scale waveforms into tabular lists of user-specified engineering units.

Table 1-3. Accessories for the MT-9500 Recorder

Accessory	Description
LA-95	A light-emitting diode (LED) display that presents the positions of all eight analog inputs in real-time. Allows precise calibration of waveform zero position.
RW-95	A chart rewinder that provides a 500-foot roll chart supply and take-up reel. Self-contained motor and power supply. Separate AC power cord.
WT-95	A sloped-front writing surface that attaches to the recorder to facilitate handwritten annotations to and viewing of recorded chart data.
PT-200	A rack-mounting, 5 1/4-inch paper take-up drawer for use with Z-fold paper. Includes slides and mounting hardware.
RC-95	A roll-around cart.
AN-95	A common-carrier rated travel case.
KB-220	A full size QWERTY keyboard with right side numeics and 2 x 40 character LCD. Connects to RS-232 port. Facilitates entry of annotation text and command of operational controls.
TC-2500	A powerful, high performance 8-channel data capture system. 4-megabyte memory. Sample rate of 2 megahertz per channel. Host programmable.
ASC Series Signal Conditioners	A complete family of Astro-Med signal conditioners adapts the MT-9500 to specific applications. Each conditioner is complete with all controls required for its particular function. See appendix A for a complete list of Astro-Med signal conditioners and their specifications.

Table 1-3. Accessories for the MT-9500 Recorder (continued)

Accessory	Description
C-950 Card Cage	A stand-alone, portable benchtop enclosure that accepts a maximum of eight ASC series plug-in signal conditioners. The signal conditioners are not included.
C-950R Card Cage	A stand-alone, 19" rack-mounting version of the C950 card cage. Accepts a maximum of eight ASC series plug-in signal conditioners. The signal conditioners are not included.

1-6.1 LED Display (LA-95)

The LED Display (LA-95 option) is a light emitting diode (LED) array that presents a dynamic display of signal frequency and amplitude for each of the MT-9500's eight channels. The accessory is 19-inches wide, 1 3/4-inches high, and 7-inches deep.

As shown in figure 1-1, the LA-95 consists of two rows of channel indicators. Each row has four channel indicators. Each channel indicator is made up of 30 individual LEDs. Channel indicators 1, 3, 5, and 7 are above and indented to the left of the lower row of indicators for channels 2, 4, 6, and 8.

The LA-95 accessory connects to the MT-9500 through the recorder's LA-95 jack. This connection powers the accessory and carries the logic levels that drive each LED channel indicator. Because the LED displays use the same data as the recorder's digital printhead, a fixed relationship exists between charted waveform traces and their positions on the LED displays.

Figure 1-1. LA-95 Accessory (LED Display)

In certain respects, the channel indicators of the LA-95 actually provide more waveform information than charted waveforms. The first three LEDs and the last three LEDs of each channel indicator register waveform signals that are off (left or right) of the corresponding chart-paper channel. This allows you to see where waveform data are going off-scale and, consequently, where signal gain or zero adjustment may be necessary. In addition, the channel indicators of the LA-95 can be used to center waveform trace outputs in each of the recorder's eight channels. This is accomplished easily by using either of two methods.

The recorder's ZERO controls can be used to move the signals until LEDs 15 and 16 of the selected channel indicator are equally illuminated and slightly flickering. This will center the waveform trace. Alternatively, the panel above the LEDs is screened with a scale that identifies each channel midpoint as well as channel extremes. This provides a visual reference for centering the waveform.

1-6.2 Rewinder (RW-95)

The Rewinder (RW-95 option) is a spooling device that automatically winds chart paper maintaining proper paper-tension as chart paper exits the recorder. The rewinder is a self-contained assembly that mounts directly to the underside of the recorder. The attached recorder and rewinder can be used with or without bench or rack enclosures.

Figure 1-2 illustrates the Rewinder option. The rewinder is 21 1/4-inches deep, 17 1/2-inches wide, and 5 1/4-inches high. The take-up reel of the rewinder accepts a maximum of 500 feet of chart paper. Power is supplied to the accessory through a 115-volt line connection. An on/off pushbutton is located on the lower-left front corner of the rewinder. The on/off pushbutton illuminates when depressed. The rewinder has a constant-torque motor that applies a constant tension to the chart paper. The motor is compatible with all recorder chart-paper speeds.

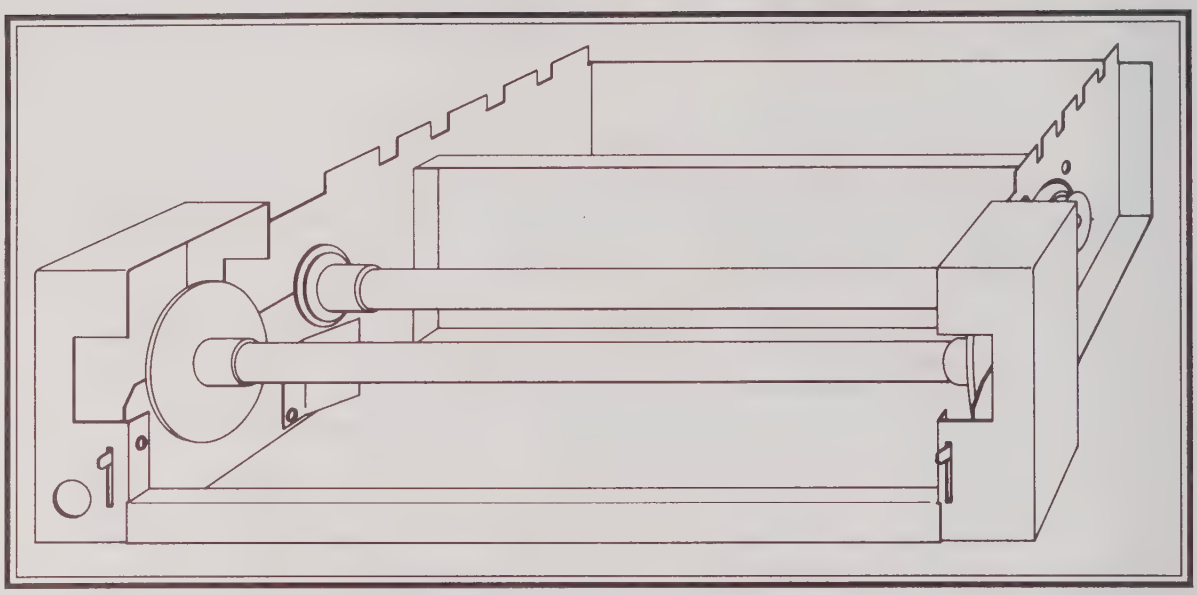

Figure 1-2. RW-95 Accessory (Rewinder)

1-6.3 Writing Table (WT-95)

The Writing Table (WT-95 option) is an easily attached or removed sloped-front chart-annotation surface. Triangular in profile (figure 1-3), the Writing Table is 18 7/8-inches wide and 7 1/4-inches deep. Four bracket supports secure the writing table to the MT-9500 front panel. The front edge of the writing table consists of a 16 1/4-inch roller 3/4-inch in diameter. When used with the Rewinder (RW-95 option) the writing table's front roller ensures a smooth flow of chart paper onto the Rewinder's take-up spool. If the writing table is used without the Rewinder option, the chart paper is discharged across the writing surface and accumulates either on the floor or, if supplied, in a paper take-up drawer (PT-200).

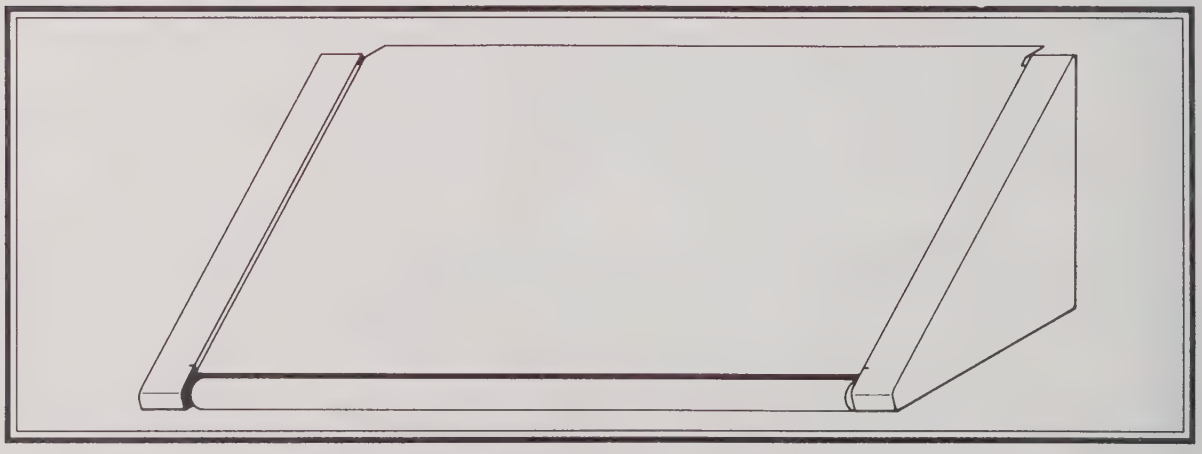

Figure 1-3. WT-95 Accessory (Writing Table)

1-6.4 Paper Take-Up Drawer, Rack Mount (PT-200)

Designed for use with any of Astro-Med's rack-mounted recorder configurations, the Paper Take-Up Drawer (PT-200 option) is used for the accumulation and storage of thermal Z-fold chart paper as it is discharged from the recorder. The drawer (shown in figure 1-4) is 19-inches wide, 5 3/16-inches high, and 17-inches deep. The accessory is provided with the slides, screws, and nuts required for attachment to a variety of 19-inch racks. When in use, the drawer opens to 12 inches to catch and store the exiting Z-fold chart paper.

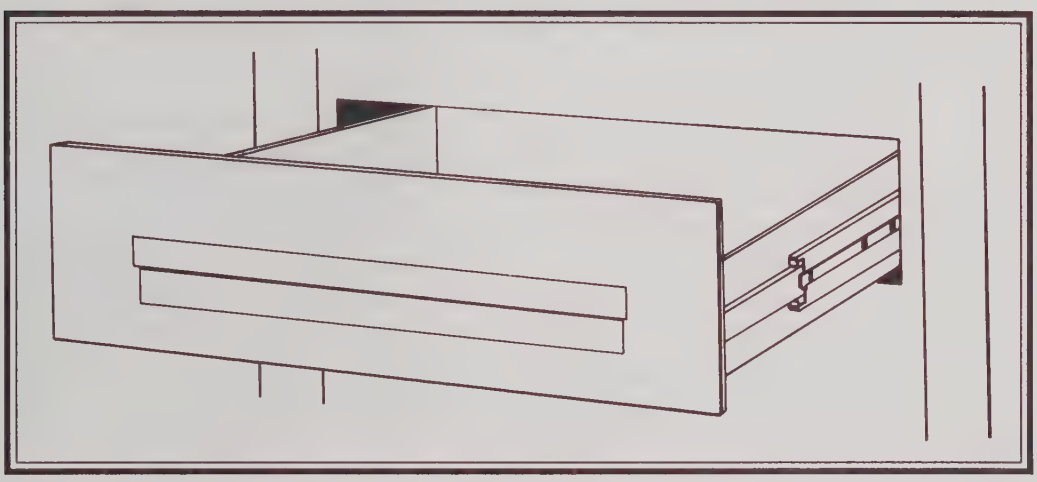

Figure 1-4. PT-200 Accessory (Paper Take-Up Drawer)

1-6.5 Roll-Around Cart (RC-95)

The RC-95 option is a sturdy, moveable cart with 5" caster wheels. It is equipped with drawers and is designed to hold the MT-9500 recorder (in its bench-top case). The drawers can either be used for storage or for paper take-up.

1-6.6 Travel Case (AN-95)

The AN-95 option is a rugged carrying case designed for transporting the MT-9500 in the recorder's uncased configuration (MT-9500R). The travel case is 24-inches long, 21-inches wide, and 15-inches high. The top and bottom of the case are hinged at the rear. When closed, the case is secured with two front latch mechanisms. All exterior corners and seams of the case are reinforced with heavy-gauge aluminum sheathing. The case can be lifted or positioned using any of five handles. One handle is located on the front of the case. The right and left sides of the case eachfeature two adjacent handles. All interior surfaces of the AN-95 are lined with two inches of cushioning foam custom fitted to the profile of the recorder.

1-6.7 Rack Enclosures

To satisfy the diverse requirements of our customers' many recorder/ peripheral equipment configurations, Astro-Med offers a varied line of rack enclosures. From the 79.7-inch tall FME-10 to the 62.3-inch tall FME-5, Astro-Med rack enclosures can accommodate virtually any equipment combination. Astro-Med installs all internal rack-hardware as required by the equipment choices of the specific customer order. Please contact us with regard to your particular enclosure requirements and we will be happy to suggest the protective enclosure that may best suit your needs.

1-6.8 Test and Calibration Diskette

A test and calibration diskette is packaged with your manual. A hardcopy playout of the contents of the diskette is also included. These items comprise appendix D of this manual. The diskette is written in BASIC and contains two files. The diskette provides a means for checking the functionality of the RS-232 and IEEE-488 computer interfaces. Recorder calibration through host control is also addressed on this diskette. These materials are essentially relevant to host-control operation of the MT-9500. Please refer to the MT-9500 Host Control Operations Manual for further information regarding these items.

1-7 Getting Started

The powerful functions of the MT-9500 are easily accessed through the recorder's front-panel keypad. However, before proceeding to the operation of the recorder, it is first necessary to unpack and set-up/install your unit. These procedures are presented in detail in the next section of this manual, "Installation."

Section 2
Installation

2-1 Setup Upon Receipt

Whether your Astro-Med MT-9500 is to be rack mounted or installed in a bench-top cabinet, the recorder requires minimal setup upon receipt. If you have ordered a rack-mount or benchtop cabinet configuration of the recorder, note that the recorder is packaged separately from its enclosure. Installing your recorder in a rack or cabinet is straightforward and is fully described in paragraphs 2-2 through 2-2.11 below.

At this point, let's discuss unpacking the recorder and its associated hardware.

The recorder is double boxed. It is protected in the inner box by a "sandwich" of foam packing. The recorder's associated hardware is located along each side of the inner box in convenient spaces created by the foam packing material. The associated hardware shipped with the recorder consists of:

- one grounded power cord
- one 500-sheet packet of Z-fold thermal paper
- one MT-9500 Operations Manual
  (with test and calibration diskette insert)
- one MT-9500 Host-Control Operations Manual
- one MT-9500 Maintenance and Service Manual
- two rack slide assemblies with mating rails*

**If you ordered an Astro-Med rack or a cabinet with your recorder, these are already installed in the enclosure.*

- a small plastic bag containing:

  - four 1/2-in #10 flat-head, Phillips-head screws*
  - four 1-in #10 Phillips-head screws with four nylon washers*
  - four 3/4-in #10 Phillips-head screws with four nylon washers*
  - four #10 U retaining nuts*
  - four #10 cap U-shape nuts*
  - two bar nut rack slides*
  - one 25-pin D-shell connector with screws
  - one 15-pin D-shell connector with screws

  **If you ordered an Astro-Med rack or a cabinet with your recorder, these are already installed in the enclosure.*

1. **Remove the materials listed above from around the recorder and set them aside.**

2. **Remove the foam packing to uncover the recorder.**

3. **Remove the recorder from the packing box and place it on a table or workspace in accordance with the MT-9500's unpacking instructions.**

4. **Examine the recorder's condition and verify that no obvious shipping damage has occurred.**

5. **After your recorder has been examined, connect the AC power cord:**

   - **first to the rear-panel power input receptacle (lower left corner of the rear panel as you view it)**

   - **then to a power outlet.**

NOTE

Line voltage requirements and fuse specifications for the MT-9500 are:

Line: 95 - 132 VAC
190 - 264 VAC
48 - 440 hertz*
600 watts
*Consult factory for operation above 66 hertz.

Fuse: 120 volts, 6 amperes (250 V)
240 volts, 3 amperes (250 V)

6. **Load the recorder with the pack of Z-fold thermal paper. Open the paper-chamber door and insert the chart paper. Put the paper pack into the paper chamber with the "THIS SIDE UP AND IN FIRST" stamp pointing to the rear of the recorder. Feed the top sheet of paper into the slot beneath the driver roller and gently push the paper through until it exits above the drive roller. Close the paper-chamber door. (A much more detailed description of this procedure in given in paragraph 3-4.1.)**

7. **Push the POWER switch into the "on" position. The recorder will perform a series of self-tests during which the front-panel LED display will show <SELFTEST>, <PASSED>, <SCN 12.7>*, and <READY>. Your recorder is ready to operate when <READY> appears on the front-panel LED display.**

   **The software configuration number (SCN) displayed by your recorder may be higher than software version in use when this manual was printed.*

During the recorder's self-test sequence, error codes may appear on the front-panel LED display. These "error codes on wake-up" are defined in table 2-1.

Table 2-1. MT-9500 Error Codes On Wake-Up

Error Code*	Description	Possible Cause**
01	Keypad CPU cannot communicate with main CPU	Bad I/O board or CPU board
02	Read/write error while testing main memory	Bad CPU board
03	CPU board error	Bad CPU board
04	I/O board error	Bad I/O board
05	Interlock error	No paper. Door open. Sensor problem.
06	Master controller error	Bad master controller or related cable
07	Slave Controller error	Bad slave or related cable
08	A/D board error	Bad A/D board
No display or erroneous display	Keypad CPU failed to wakeup	Bad I/O board or power problem

*These are not hexadecimal codes. They appear on the recorder LED only as a result of error conditions after MT-9500 power-up.

**This column highlights sources of error that are most frequently encountered. Sources of error other than those listed may exist.

Often, a number of these errors can be corrected by checking the input AC voltage level and the cable connections. Error 5 is usually caused either by the chart paper running out or by the paper-chamber door being partially open. If you encounter any error code that you cannot resolve, please call our customer service department at 1 (401) 828-4000.

If you want to test the functioning of the waveform recording capabilities of your MT-9500, you can do so now. The simplest way to accomplish this is to use BNC cables to connect one or more (to a maximum of eight) signal sources to the recorder's rear-panel analog-input BNC connectors (see 3-3.12). These connectors are labeled "CH8," "CH7," etc.

See your signal conditioner manual for detailed information regarding signal conditioner/recorder connections.

Either of two basic analog input sensitivities is available with the MT-9500. The recorder's standard A/D circuit board has a full-scale sensitivity range of ±200 mV to ±2.5 V. An optional A/D circuit board with a full-scale sensitivity range of ±2 V to ±5 V is available.

2-2 Installation Alternatives

You have just unpacked, setup, and applied power to the recorder. You now need to prepare the equipment configuration in which the recorder will be used. Is your recorder to be used without a case? Will your recorder be used with Astro-Med's Rewinder option (RW-95)? Is your recorder going to be mounted in a rack or in a case? Will you be using the Writing Table option (WT-95) with your recorder? Each of these possibilities is discussed below.

2-2.1 Astro-Med Rack-Mount and Case Enclosures

Astro-Med recognizes that its recorders are used in many different recording environments and in many different equipment configurations. In response, Astro-Med offers a varied line of enclosures to accommodate the MT-9500 and its accessories. Astro-Med rack-mount and case enclosures offer protection, durability, and color-coordinated good looks. In addition, Astro-Med enclosures offer the time-and-labor saving advantage of being preconfigured for recorder and accessory installation. Rack-mount enclosures contain AC power strips to ensure that the recorder and its peripheral equipment have easy access to power connections. The cumbersome work of installing interior rack-slides is expertly performed in our factory. All you need to do when you receive your recorder is to slide it into place and secure it with four screws and their accompanying washers. Astro-Med also offers customized rack configurations for unique recording requirements.

2-2.2 Recorder Without Case

Operation of the recorder does not require a case or rack. When you have followed the instructions of paragraph 2-1, all you have to do is ensure that the recorder is on a stable surface. The instrument's full range of installed features is available for use.

2-2.3 Recorder in an Astro-Med Enclosure

After you have unpacked and set-up your MT-9500, disconnect any power cords or signal connection cords before installing the recorder in an Astro-Med enclosure or any other enclosure. Reestablish these connections when the installation process has been completed.

If you have purchased an Astro-Med rack-mount or case enclosure, it has already been equipped with properly positioned and installed rack slide assemblies. Follow the procedure below to install the recorder in an Astro-Med enclosure.

WARNING

The recorder is heavy. It is recommended that two individuals perform the lifting and positioning of the recorder required during installation. **Always** lift the MT-9500 using the slide rails attached to the recorder's left and right sides. **Never** use the front panel or rear-panel controls when lifting the instrument. The controls cannot support the recorder's weight and, consequently, they will be damaged.

1. **Facing the recorder's front panel, grasp the slide-mount rail supports located on the left and right sides of the recorder.**

2. **Position the recorder's slide-mount rails to mate with the inner rack slide assemblies already installed in your enclosure.**

3. **Slide the recorder onto the inner rack-slide assembly mount and carefully push the unit onto the rack slides until the recorder is fully seated in the enclosure.**

> **CAUTION**
>
> Never force the recorder into the enclosure. You may damage both the enclosure and the MT-9500 if you attempt to force the recorder into position. If you encounter resistance when sliding the recorder into place, remove the instrument from the enclosure and try again. When properly mated with the enclosure's rack slide assemblies, the recorder will slide easily into position.

4. **Using four 1-inch #10 Phillips-head screws and four nylon washers that are supplied with your recorder, secure the recorder in the enclosure.**

   You will find the screw holes necessary for securing the MT-9500 approximately 1-1/2-inch from each of the corners of the recorder's front panel.

5. **Establish power and signal input connections to the recorder.**

Power is applied to the recorder in a number of ways depending on the particular rack or case being used. To facilitate power and signal input, smaller cases may have no back panel. In these instances, connections are made directly to the rear-panel of the enclosed recorder. Larger enclosures may have a lockable rear door that both protects and provides convenient access to the rear of the recorder and its accessories. Larger cases may also have an interior AC power strip allowing the recorder and peripherals to be plugged in within the enclosure itself. You will need to examine your recorder/enclosure configuration to determine how power and signal connections will be established.

2-2.4 Recorder in Customer-Furnished Enclosure

If your enclosure has not been supplied by Astro-Med, it may require installation of the rack slide assemblies supplied with the recorder. Follow the procedure below to install the rack slide assemblies that support the MT-9500 when it is used in any enclosure.

1. **Determine where in the enclosure you want to mount the recorder.**

   Rack-mounting enclosures are equipped with interior frames to which you must attach the rack slide assemblies needed to hold the recorder. These interior supports have regularly spaced holes along their length to accommodate the mounting screws that will secure the rack slide assemblies and the recorder in the locations that you choose.

   Obviously, where you mount your rack slides determines where your recorder will be positioned. As shown in figure 2-1, the recorder is 10-1/2-inches high. A slide rail is mounted to each side. Running the length of the recorder, the mid-line of each rail is located 1-3/4 inches from the recorder's bottom and 8-3/4 inches from the recorder's top. You need to use these measurements to determine where in the enclosure you want to mount the rack slides. Decide where you want the recorder positioned and then either measure down 8-3/4 from where the top of the recorder will be or up 1-3/4 inches from where the bottom of the recorder will be.

   Mark the enclosure's interior frame with a pencil. You have just marked the mid-line of the recorder's slide rails. Either of these measuring approaches will allow you to position the rack slides and, consequently, the recorder in the position you desire. Figure 2-1 illustrates one of many possible rack-mount configurations and shows the measurement relationships discussed above. Figures 2-2a through 2-2f illustrate significant individual details of the rack-mount process.

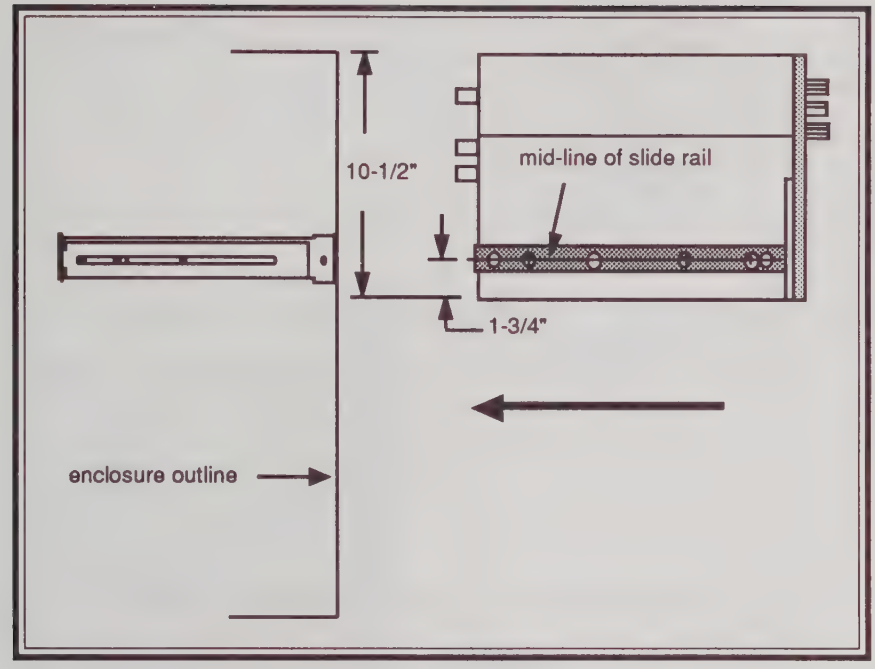

Figure 2-1. Example of Rack Mount/Recorder Installation Relationship

2. **Remove the masking tape that holds the two rack slide assemblies together and separate them.**

   Figures 2-2a through 2-2c show the rack slide assemblies. Refer to these illustrations when following the steps below.

3. **Loosen the three Phillips-head screws (figure 2-2c) that allow adjustment of the length of the rack slide.**

4. **Pull on the rack slide to lengthen or shorten the assembly to match the depth of your enclosure. The maximum extension of the rack slide assemblies is 24 inches.**

5. **When the rack slide has been adjusted to the proper length, tighten the three Phillips-head screws to "freeze" the rack slide at the adjusted length.**

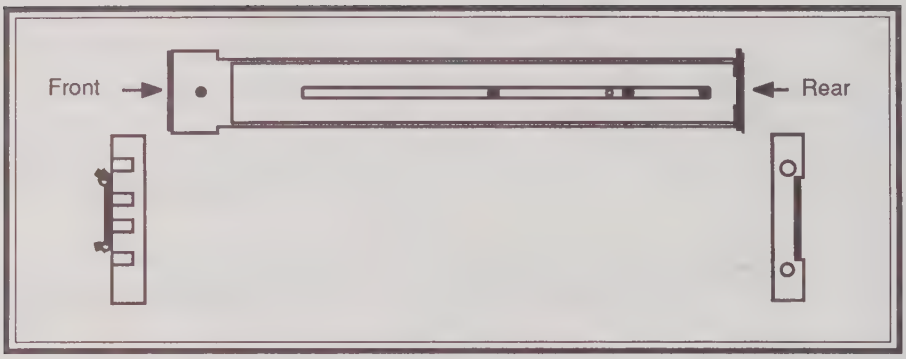

Figure 2-2a. Rack Slide Assembly (faces enclosure side)

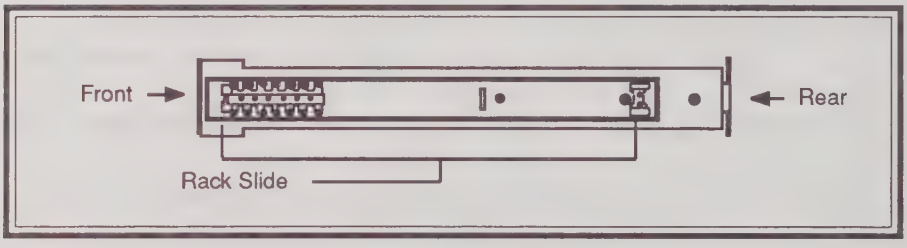

Figure 2-2b. Rack Slide Assembly (faces recorder)

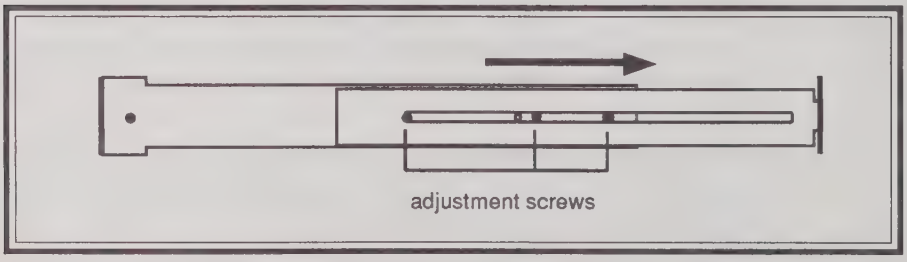

Figure 2-2c. Rack Slide Assembly Adjustment

6. **Attach the front end of one of the rack slides to either the left or right side (it doesn't matter which) of the enclosure as viewed from the front.**

Use two 1/2-inch flat-head, Phillips-head screws and one bar nut as shown in figure 2-2d.

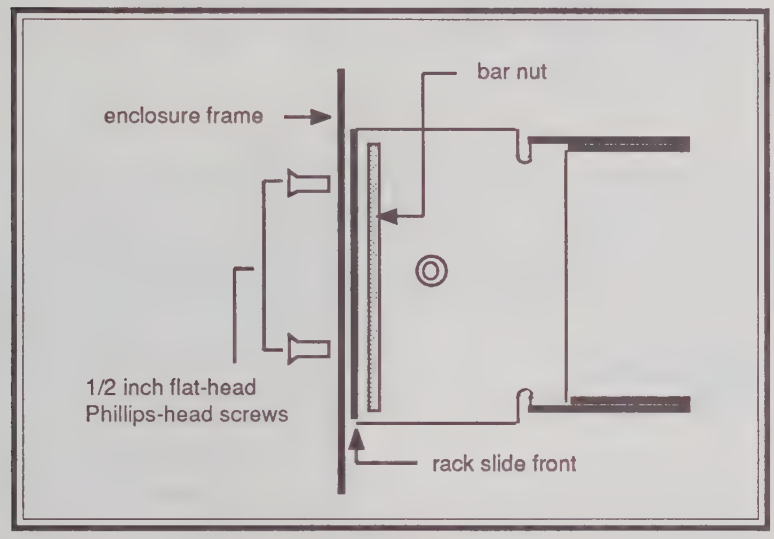

Figure 2-2d. Attaching Rack Slide Front to Enclosure

7. **Attach the rear end of the rack slide to the interior frame.**

Use two 3/4-inch Phillips-head screws and two U-shaped clip nuts as shown in figure 2-2e.

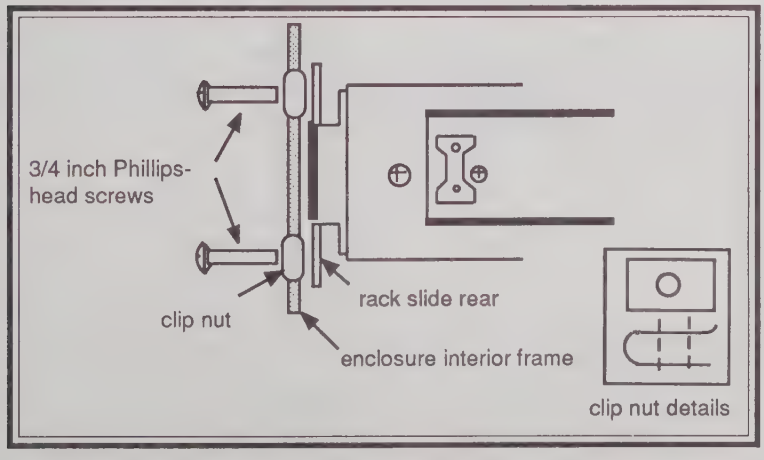

Figure 2-2e. Attaching Rack Slide Rear to Enclosure

8. **Repeat steps 1 through 7 for the remaining rack slide assembly.**

   When a rack slide assembly is properly oriented:

   - *the inner rack slide (figure 2-2b) faces the recorder.*
   - *the four slots at the front end of the rack slide align with screw holes on the front opening of the enclosure's interior support frame.*
   - *the two screw holes at the rear end of the rack slide assembly align with two screw holes on the rear of the enclosure's interior support frame.*

9. **Facing the recorder's front panel, grasp the slide-mount rail supports located on the left and right sides of the recorder.**

WARNING

The recorder is heavy. It is recommended that two individuals perform the lifting and positioning of the recorder required during installation. **Always** lift the MT-9500using the slide rails attached to the recorder's left and right sides. **Never** use the front panel or rear-panel controls to lift the recorder. The controls cannot support the recorder's weight and, consequently, they will be damaged.

10. **Position the recorder's slide-mount rails to mate with the inner rack slide assemblies you just installed.**

11. **Slide the recorder onto the inner rack-slide assembly mount and carefully push the unit onto the rack slides until the recorder is fully seated in the enclosure.**

CAUTION

Never force the recorder into the enclosure. You may damage both the enclosure and the MT-9500 if you attempt to force the recorder into position. If you encounter interference when sliding the recorder into place, remove the instrument from the enclosure and try again. When properly mated with the enclosure's rack slide assemblies, the recorder will slide easily into position.

12. **Using the four 1-inch #10 Phillips-head screws, four nylon washers, and four U-nuts that are supplied with your recorder, secure the recorder in the enclosure. Figure 2-2f illustrates the correct mounting-hardware configuration.**

You will find the screw holes necessary for securing the MT-9500 approximately 1-1/2-inches from each of the corners of the recorder's front panel.

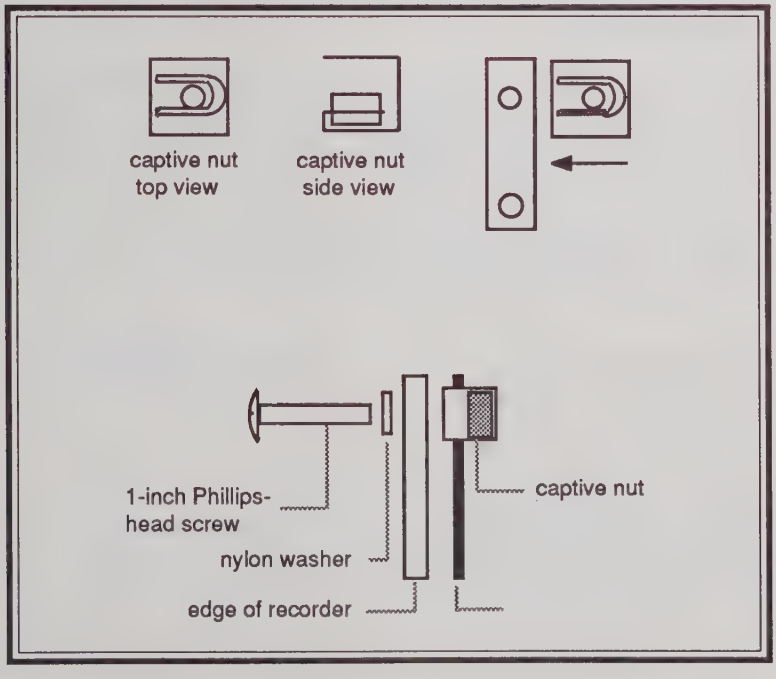

Figure 2-2f. Attaching Recorder to Enclosure

13. Establish power and signal input connections to the recorder.

2-2.5 Recorder and Rewinder Without Case

If you are using the recorder with the Rewinder option (RW-95), you need to attach the rewinder to the recorder before the MT-9500 is installed in a rack or case. After the components have been attached to one another, they can either be used immediately as a unit or they can be installed as a combination into any suitably configured rack or case.

Use the following procedure to connect a rewinder to your recorder.

1. **Facing the recorder's front panel, grasp the slide-mount rail supports located on the left and right sides of the recorder.**

2. **Carefully lift the recorder and place it on top of the rewinder.**

   There are five screw holes in each side of the recorder. The holes are located just above the bottom edge of each side.

> **WARNING**
>
> The recorder is heavy. It is recommended that two individuals perform the lifting and positioning of the recorder required during installation. **Always** lift the MT-9500 using the slide rails attached to the recorder's left and right sides. **Never** use the front panel or rear-panel controls to lift the recorder. The controls cannot support the recorder's weight and, consequently, they will be damaged.

3. **Position the recorder on the rewinder so that the recorder's preconfigured drill holes are matched to those on each side of the rewinder.**

   When the recorder is properly positioned, its attaching screw-holes align with those of the rewinder and the take-up reel of the rewinder extends approximately 5 inches in front of the recorder's front panel.

4. **Attach the recorder to the rewinder using the screws and washers supplied with the rewinder.**

   For attachment to the recorder, the rewinder is supplied with:

   - *Ten 5/16-inch #6 screws*
   - *Ten flat washers*
   - *Ten split washers*

5. **Using the power cord supplied with the rewinder, connect the rewinder to any AC power receptacle.**

When the rewinder has been attached and loaded with roll thermal paper (3-4.2), the units are ready to be turned on and used.

2-2.6 Recorder and Rewinder In Astro-Med Rack-Mount or Case Enclosure

Follow the directions of paragraph 2-2.5 above. When the recorder and rewinder have been joined, they can be installed in any case or rack configuration that has sufficient space to accommodate them.

If you have purchased an Astro-Med rack-mount or case enclosure, the rack or case has already been equipped with properly positioned and installed rack slide assemblies. Follow the procedure below to install the recorder/rewinder combination in an Astro-Med enclosure:

1. **Facing the recorder's front panel, grasp the slide-mount rail supports located on the left and right sides of the recorder.**

WARNING

The recorder/rewinder combination is heavy. It is recommended that two individuals perform the lifting and positioning of the recorder/rewinder required during installation. **Always** lift the recorder/rewinder combination using the slide rails attached to the recorder's left and right sides. **Never** use the recorder's front panel or rear-panel controls to lift the recorder/rewinder. The controls cannot support the recorder's weight and, consequently, they will be damaged.

2. **Position the recorder's slide-mount rails to mate with the inner rail mount already installed in your enclosure.**

3. **Slide the recorder/rewinder combination onto the inner rail mount and carefully push the units onto the rack slides until the units are fully seated in the enclosure.**

> **CAUTION**
>
> Never force the recorder/rewinder into the enclosure. You may damage both the enclosure and the recorder/rewinder if you attempt to force the units into position. If you encounter interference when sliding the recorder/rewinder into place, remove them from the enclosure and try again. When properly mated with the enclosure's slide rack assemblies, the units will slide easily into position.

4. **Using the four 1-inch #10 Phillips-head screws and four nylon washers that are supplied with your recorder, secure the recorder to the enclosure. The rewinder does not require individual attachment to the recorder. It is secured because it is attached to the recorder.**

   You will find the appropriate screw holes approximately 1-1/2-inch from each of the corners of the recorder's front panel.

5. **Establish power and signal input connections to the recorder/rewinder.**

2-2.7 Recorder and Rewinder in Customer-Furnished Rack Mount or Case Enclosure

Use the following procedure to install the recorder/rewinder combination in an enclosure that you have supplied.

1. **Attach the rewinder to the recorder as described in paragraph 2-2.5.**

2. **As necessary, install the rack slide assemblies in your enclosure as described in paragraph 2-2.4.**

3. **Using the four 1-inch #10 Phillips-head screws and four nylon washers that are supplied with your recorder, secure the recorder/rewinder to the enclosure. The rewinder does not require individual attachment to the enclosure. It is secured because it is attached to the recorder.**

   You will find the appropriate screw holes approximately 1-1/2-inch from each of the corners of the recorder's front panel.

4. **Establish power and signal input connections to the recorder/rewinder.**

2-2.8 Attachment of Writing Table (WT-95) to Recorder

For attachment to the recorder, the writing table is supplied with the following hardware items:

- left and right support brackets
- four 1/2-inch black screws
- four 1/2-inch washers

Figure 2-3 shows some of this hardware. Refer to this illustration when performing the procedure below.

1. **Remove the four rounded plastic plugs (they each consist of two pieces) that occupy the mounting holes for the writing table on the recorder's front panel.**

2. **Secure either the left or right support bracket to the recorder's front panel using two of the screws and two of the washers supplied.**

3. **Secure the remaining support bracket in the same manner.**

4. **Slip the writing table assembly into place on the support brackets.**

NOTE

If you use the writing table in conjunction with the recorder/rewinder combination, you will need to remove the writing table from its support brackets when loading the rewinder with roll thermal paper.

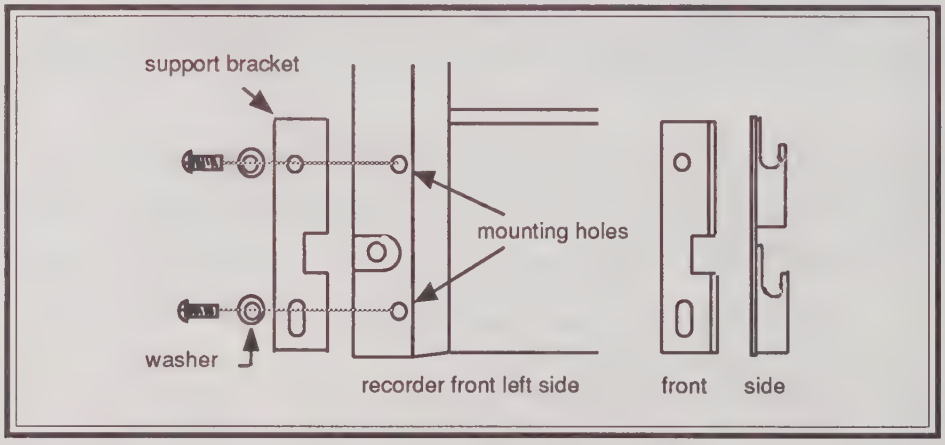

Figure 2-3. Attaching Writing Table Mounting Brackets

2-2.9 Using the LA-95 Option With the Recorder

CAUTION

Power to both the recorder and the LA-95 must be **OFF** before connecting the LED array to the MT-9500. The LA-95 could suffer electrical damage if this caution is not strictly observed.

The LED Array option (LA-95) is generally mounted above the recorder in a rack mount or case configuration. Because the LA-95 is light-weight, it does not require rack slide assemblies for support. Instead, this accessory is held in place and supported by two 3/4-inch Phillips head screws and their associated washers and captive nuts. All you have to do is determine where in the enclosure you want to mount the LA-95, measure as required to position the device, and secure the accessory as shown in figure 2-4.

When the LA-95 has been secured in place, you are ready to connect it to the recorder using the attaching cable supplied with the array.

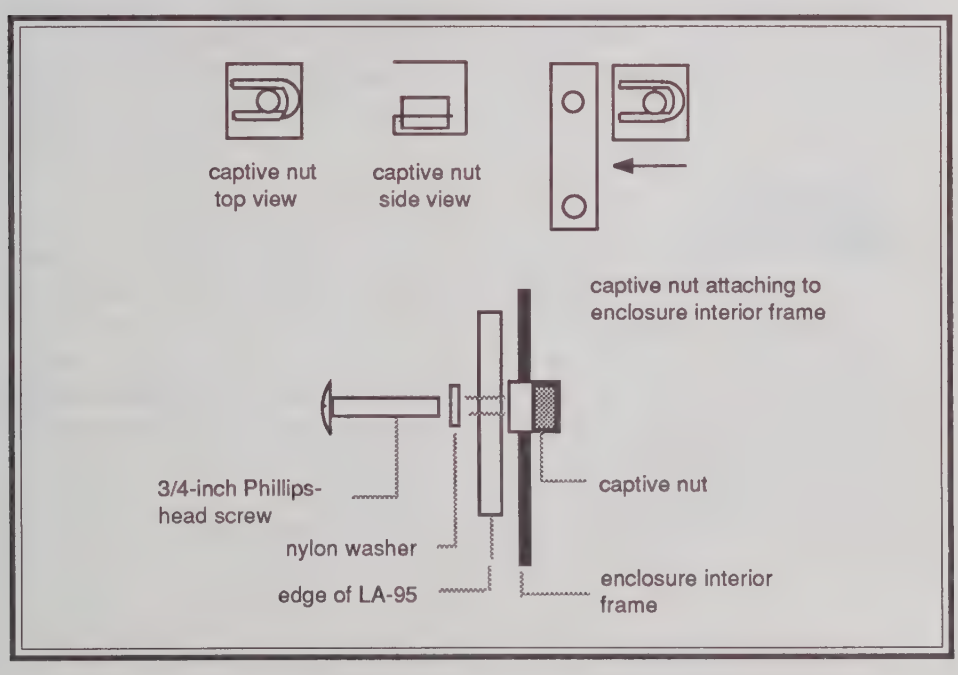

Figure 2-4. Mounting LA-95 to Enclosure

CAUTION

Power to both the recorder and the LA-95 must be **OFF** before connecting the LED array to the MT-9500. The LA-95 could suffer electrical damage if this caution is not strictly observed.

The attaching cable has a 15-pin D-shell connector at each end. Each of these D-shells has captive attachment screws. With power to the recorder turned off, attach one D-shell to the input on the rear of the LA-95. Attach the remaining D-shell connector to the LA-95 (AUX DISPLAY) input (3-3.4) on the rear panel of the MT-9500. This completes attachment of the accessory to the recorder.

2-2.10 Paper Take-Up Drawer in Astro-Med Enclosure

The Paper Take-Up Drawer (PT-200) is a rack-mounting 5-1/4" deep drawer for collecting thermal Z-fold chart paper as it exits the recorder. If you ordered an Astro-Med enclosure in which the drawer will be used, the rack slide assemblies that hold the drawer have already been installed. All you need to do is mate the slide rails attached to the drawer with the rack slide assemblies already installed in the enclosure. Carefully slide the drawer into the enclosure until it is fully seated. When properly seated, the drawer will open and close smoothly.

CAUTION

Never force the drawer into the enclosure. You may damage both the enclosure and the drawer if you attempt to force the drawer into position. If you encounter interference when sliding the drawer into place, remove the accessory from the enclosure and try again. When properly mated with the enclosure's slide rack assemblies, the recorder will slide easily into position.

2-2.11 Paper Take-Up Drawer in Customer-Furnished Enclosure

If you are mounting the take-up drawer in your own enclosure, you will need to install the rack slide assemblies supplied with the drawer. The installation procedure for the rack slide assemblies is identical to the procedure given in paragraph 2-2.4, "Recorder in Customer-Furnished Enclosure." Please refer to paragraph 2-2.4 to install your paper take-up drawer.

2-3 Line Voltage Selection

The MT-9500 can be operated in either of two voltage ranges:

- 90 - 132 VAC or
- 180 - 264 VAC

Unless otherwise specified, the voltage range is factory preset for the standard North American voltage requirement of 120 VAC. In recorders carrying serial numbers before 8J264, this setting can be changed by accessing a voltage selector module built into the AC Input receptacle. (Look for the module to the right of the three-pronged AC power cord connection.) If you want to change the standard voltage range, use a small screwdriver to remove the fuse holder cover. Extract the printed circuit card mounted to the right of the fuse. Move the white plastic indicator to the opposite side of the card and reinstall it. You will also need to change the fuse to the appropriate value screened onto the rear panel of the recorder. Finish this process by reinstalling the fuse holder cover. The tip of the white plastic indicator should protrude from the fuse holder cover through one of two holes labeled either 120 V or 240 V.

Line voltage selection in recorders with serial numbers of 8J264 or greater is accomplished by using a slide switch mounted on the rear panel to the right of the AC Input receptacle. To change the voltage range in these recorders, use a screwdriver blade to select the appropriate, clearly labeled switch position: either 115 V or 230 V . You will also need to change the fuse value as described above.

Section 3
Operation

3-1 General Information

Your recorder is factory equipped with a standard operational mode: *Real-time Operation*. A second operational mode, *Data Capture and Playback*, is available when the Data-Capture option (DC-95) is ordered. These modes are fully discussed in paragraphs 3-5 and 3-6, respectively.

Before actually employing your recorder in any given task, however, it is necessary to familiarize yourself with the MT-9500's physical controls, indicators, and connections. Paragraphs 3-2 and 3-3 introduce you to these fundamental hardware features. Understanding the purpose and function of each control will allow you to quickly master this versatile and remarkably user-friendly machine.

3-2 Front Panel Controls and Indicators

The front panel of the MT-9500 is illustrated in figure 3-1. You should refer to this figure throughout this discussion of the front panel controls. All of the recorder's functions and parameters can be accessed and changed by using the controls resident on the front panel. Essentially, the front panel can be described as having the following groupings:

- Data-Entry Keypad
- Signal-adjustment group (ZERO, GAIN, CAL/UNCAL/GND)
- Trigger definition group (TRIG, SLOPE, LEVEL)
- Event and ID group
- Light Emitting Diode (LED) Display
- Power Switch

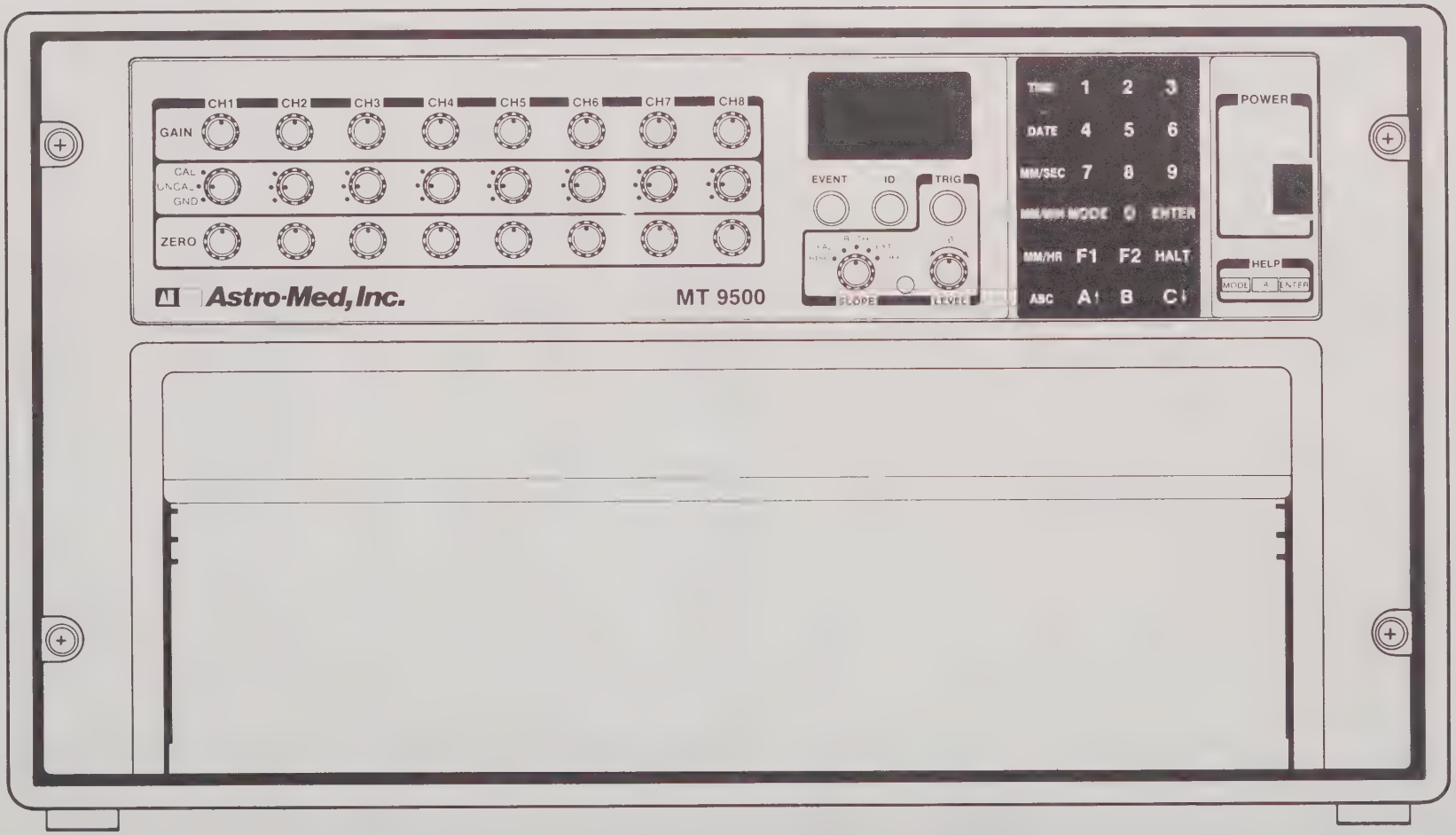

Figure 3-1. MT-9500 Front Panel Controls

3-2.1 Data-Entry Keypad

The front panel data-entry keypad is the most fundamental tool for communicating with and controlling the activities of the MT-9500 recorder. The keypad is used:

- To enter or change all real-time setup information (time, date, chart speed, and insta-speeds)
- To command the recorder to enter, halt, or exit any function or mode of operation
- To change recorder modes and functions
- To view and check the status of recorder real-time set-up information without entering or changing data
- To view and check the status of each mode or function installed in the recorder without entering or changing data

The keypad contains twenty-four pushbuttons in four columns of six. For ease of discussion, we will refer to these pushbuttons as keys throughout this manual. When the keypad is used, the modes and functions that are accessed and the data that are entered appear on the front-panel LED display (paragraph 3-2.2). Figure 3-2 depicts the keypad. Refer to this figure in following the discussion below. This paragraph provides a brief introduction to the keypad and its uses. Paragraphs 3-5 and 3-6 fully describe the keypad in relation to real-time operation and data capture/playback.

The [MODE] key, [F1] and [F2] function keys, and the real-time setup keys are used in association with the numeric keys [0] through [9] and the [ENTER] key to define and implement each recorder capability.

The real-time setup keys of the left-most column of the keypad are labeled (from top to bottom): [TIME], [DATE], [MM/SEC], [MM/MIN], [MM/HR], and [ABC].

Each is discussed below.

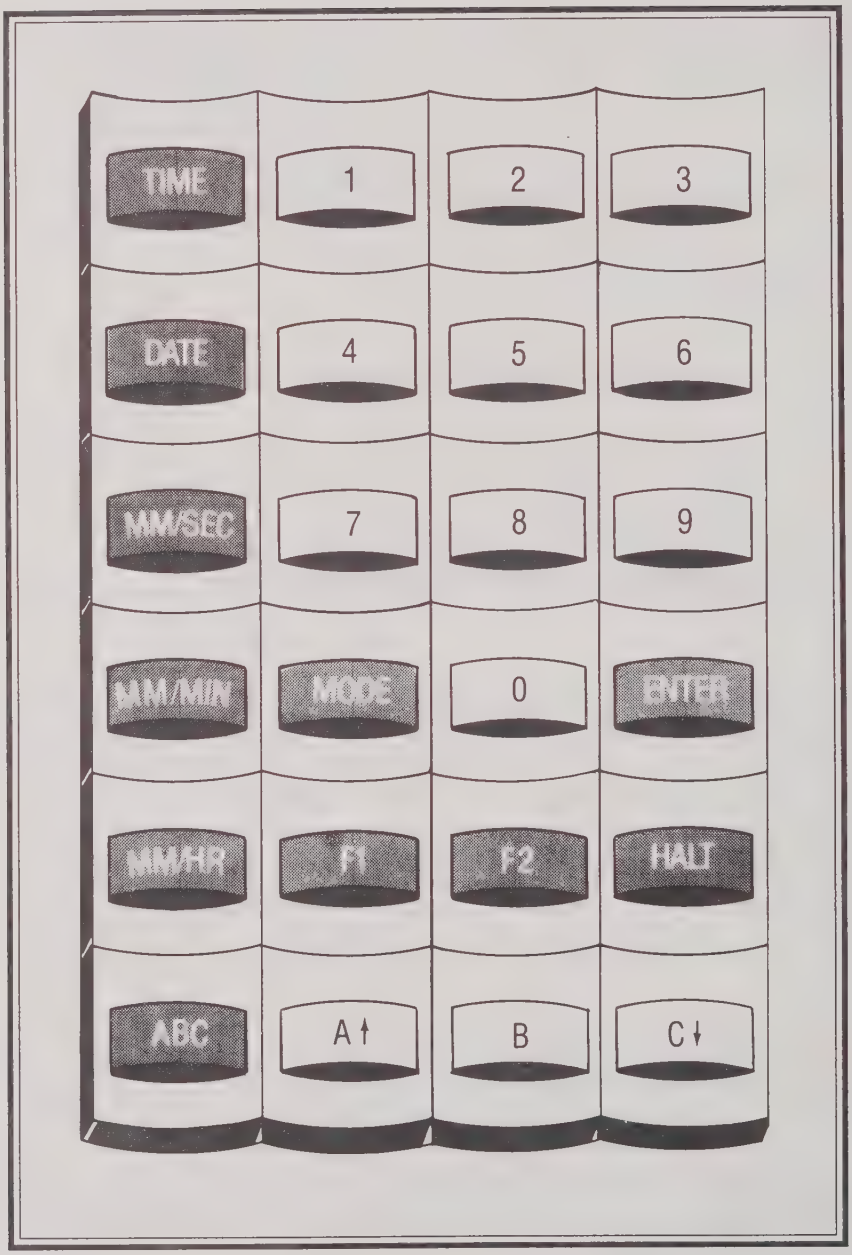

Figure 3-2. Front Panel Keypad

The **[TIME]** key is used with numeric keys [0] through [9] to set the time-keeping function of the keypad's internal clock. Time must be entered in 24-hour format. Leading zeros are used as necessary.

Generic keying sequence: [TIME] [HH MM] [ENTER]
Example: 7:35 am [TIME] [0] [7] [3] [5] [ENTER]

The **[DATE]** key is used with numeric keys [0] through [9] to set the date-keeping function of the keypad's internal calendar. The date must be entered with leading zeros as necessary.

Generic keying sequence: [DATE] [MM DD YY] [ENTER]
Example: Jan 23, 1988 [DATE] [0] [1] [2] [3] [8] [8] [ENTER]

[MM/SEC], **[MM/MIN]**, **[MM/HR]** are used with numeric keys [0] through [9] to set the chart speed in millimeters per second, minute, or hour. Leading zeros must be used as necessary.

Generic keying sequence: [MM/SEC, MIN, or HR] [XXX] [ENTER]
Examples: 25 mm/sec [MM/SEC] [0] [2] [5] [ENTER]
135 mm/min [MM/MIN] [1] [3] [5] [ENTER]
200 mm/hr [MM/HR] [2] [0] [0] [ENTER]

[ABC] (single key) permits programming of the recorder's insta-speed features. Insta-speeds are preset chart speeds instantly available when the keypad's individual [A], [B], or [C] keys (bottom row of keypad) are pressed. The three insta-speeds are user-programmed and invoked by means of the keypad's individual [A], [B], and [C] keys and numeric keys [0] through [9]. When [ABC] (single key) is pressed, the LED display reads <A,B OR C>. Insta-speeds are then set by pressing (1) the individual [A], [B], and [C] keys, (2) the [MM/SEC], [MM/MIN], or [MM/HR] keys, and (3) three numeric keys from [0] through [9] to specify the desired chart speed increment. Leading zeros must be used as necessary.

Generic keying sequence: [ABC] [A, B, or C] [MM/SEC, MIN, or HR] [XXX] [ENTER]
Example: [ABC] [A] [MM/SEC] [0] [0] [1] [ENTER]

The **[MODE]** key is used in conjunction with numeric keys [0] through [9] to enter the recorder into a desired operational mode. Table 3-1 is a list of all modes available on recorders equipped with all firmware options.

Generic keying sequence: [MODE] [X] [ENTER]
Example: HELP mode [MODE] [8] [ENTER]

The **[F1]** and **[F2]** keys are used in conjunction with numeric keys [0] through [9] to enter the recorder into a desired function. Table 3-2 is a list of all functions available on recorders equipped with all firmware options.

Generic keying sequence: [F1 or F2] [X] [ENTER]
Example: define trigger [F1] [3] [ENTER]

The **[ENTER]** key is pressed to conclude mode, function, or data-input keying sequences and to instruct the recorder to accept them. The [ENTER] key is also used to escape modes and functions. When operating the recorder, press [HALT] and/or [ENTER] to escape the ongoing mode or function.

The **[HALT]** key is pressed to stop and restart printing of recorder output and to escape from various modes and functions.

In addition to using the keypad for entering or changing data, you can use the data-entry keypad to instruct the recorder:

- To present the real-time setup parameters ([TIME], [DATE], [MM/SEC], [MM/MIN], [MM/HR], [ABC]) on the LED display so that they can be reviewed

- To present the installed modes and functions on the LED display so that they can be reviewed

It is easy to use the keypad to view recorder setups, modes, and functions. Simply punch-in the keying sequence of the mode, function, or parameter you wish view without pressing the [ENTER] key. The recorder's LED display will then show the mode or function that has been keyed-in. When you are through with your review, press the [HALT] key to return the recorder to a <READY> state. For example, pressing [MODE] [1] will cause <OVLAP RT> to be displayed informing you that Mode 1 is the real-time overlap mode. Pressing [MODE] [2] will cause <CON SS U> to be displayed informing you that Mode 2 is the continuous untriggered snapshot mode. Each of the recorder's modes, functions, and setups can be reviewed in this way.

Table 3-1. MT-9500 Modes of Operation

Mode	Keying Sequence	Definition
Mode 0	[MODE] [ENTER]	8-channel real-time recording
Mode 1	[MODE] [1] [ENTER]	Overlap real-time recording
Mode 2*	[MODE] [2] [ENTER]	Continuous untriggered snapshot
Mode 3*	[MODE] [3] [ENTER]	Continuous triggered snapshot
Mode 4	[MODE] [4] [ENTER]	Dual Speed real-time recording
Mode 5*	[MODE] [5] [ENTER]	Acquire single snapshot
Mode 6*	[MODE] [6] [ENTER]	Playback single snapshot
Mode 7	[MODE] [7] [ENTER]	Formfeed: advance chart paper to next index mark
Mode 8	[MODE] [8] [ENTER]	HELP: provides playout of Condensed Operations Manual
Mode 9	[MODE] [9] [ENTER]	Datalogger: waveform data as tabular list of user-specified engineering units

*Available during Data Capture and Playback operation.

This table applies to a recorder equipped with all firmware options.

Other modes, such as line printing, plotter, and digital data transfer are available only through host control.

Table 3-2. MT-9500 Function Commands

Keying Sequence	Definition
[F1] [ENTER]	Define channel order
[F1] [1] [ENTER]	Grid printing on/off
[F1] [2] [ENTER]	Annotation/Event Marker definition
[F1] [3] [ENTER]*	Define trigger information
[F1] [4] [ENTER]*	Define playback information
[F1] [5] [ENTER]*	Set X and Y channel choices
[F1] [6] [ENTER]*	Define acquisition information
[F1] [7] [ENTER]	Define signal polarity reversal
[F1] [8] [ENTER]	Set calibration for Datalogger mode
[F2] [ENTER]	Edit interchannel buffers
[F2] [1] [ENTER]	Not used
[F2] [2] [ENTER]	Set factory defaults
[F2] [3] [ENTER]	Enter timer operation
[F2] [4] [ENTER]*	Trigger enable/disable
[F2] [5] [ENTER]	Define snapshot sample rate clock source
[F2] [6] [ENTER]	Set communication type (local or host)
[F2] [7] [ENTER]**	Define real-time motor speed source
[F2] [8] [ENTER]	Define signal conditioner report status

*Available when using Data Capture and Playback features.
**RD-95 option required.

This table applies to a recorder equipped with all firmware options.

3-2.2 Signal-Adjustment Group

The signal-adjustment group provides real-time waveform trace position controls and signal-strength controls for the MT-9500's eight recording channels. Each channel has three individual controls placed one above the other in the following order: GAIN, CAL/UNCAL/GND, and ZERO. The controls for each channel are adjacent to one another creating three horizontal rows each consisting of eight control knobs.

For each channel, the controls of the signal adjustment group:

- Position the real-time trace within the the channel
- Establish the calibration frame of reference for the real-time waveform trace
- Vary the gain applied to the signal on the trace to expand or reduce the appearance of the real-time trace. This affects the recorded waveform rather than the input signal.

ZERO The ZERO control is used to shift the real-time waveform trace of an input signal to any position within the selected channel. In using this control, you will probably want to ground the incoming signal to obtain a flat-line trace. You can do this by setting the CAL/UNCAL/GND switch to GND. The zero-baseline trace can then be easily centered or shifted by rotating the ZERO control knob in the direction of the desired left or right shift. When you have positioned the zero baseline, you can recover the real-time waveform trace by adjusting the CAL/UNCAL/GND switch and, if appropriate, the GAIN control.

CAL/ UNCAL/ GND The CAL/UNCAL/GND switch either puts the waveform trace on ground level or establishes the real-time waveform in a channel grid that can be calibrated or uncalibrated.

When switched to GND, the waveform trace is put on ground level and a flat-line trace is obtained.

When set to CAL, the switch causes a precise, factory-set gain to be applied to the input signal. Because the gain has been fixed to a known quantity, each block of the grid that is printed with the real-time waveform takes on precise value. In effect, the grid becomes calibrated. In the MT-9500, the CAL position sets the sensitivity to 10 mV per division. Astro-Med will alter the factory-set gain to customer specifications to record a maximum of 10 volts full scale. *Please be aware that - if you requested it - the factory-set gain on your recorder has been changed to your specifications.* As described in paragraph 3-3.16, you can also recalibrate the preset gain yourself.

When set to UNCAL, there is no preset gain. Instead, you can rotate the GAIN control to adjust the appearance of the real time waveform trace.

GAIN The GAIN control applies a variable fractional gain to the signal on the trace, that is, the GAIN control affects the recorded waveform rather than the input signal. As gain is increased or decreased, the appearance of the real-time waveform trace expands or contracts. The GAIN control is active only when the CAL/UNCAL/GND switch is set to UNCAL.

3-2.3 LED Display

The front-panel LED display provides a visual readout of all front-panel keypad data entries and carries recorder-generated error messages when errors are encountered during either recorder power-up or operation. A list of error messages that you might encounter when using the recorder is given in paragraph 3-4, "Recorder Setup."

3-2.4 EVENT and ID Pushbuttons

The EVENT and ID pushbuttons are adjacent to one another immediately below the LED display. Their functions are described below.

EVENT The EVENT pushbutton provides a simple, manual front-panel control for noting real-time waveform data of interest to you. The recorder continuously prints a System Event Marker line on the right-most side of the chart paper as viewed from the front of the recorder. When the EVENT pushbutton is pressed, the event marker deflects to the left where it remains until the pushbutton is released. When released, the event marker returns to its right-most position.

ID When pressed, the ID pushbutton labels the real-time waveforms within each recorder channel with the appropriate channel numbers. This is a particularly useful feature when in the recorder's overlap mode of operation. Overlapped waveforms are quickly and easily differentiated by their clearly printed corresponding channel numbers. See figure 3-8.

3-2.5 Trigger Definition Group

The trigger definition group consists of three controls labeled TRIG, SLOPE, and LEVEL and a trigger lamp that illuminates whenever a trigger is detected. Together, the SLOPE and LEVEL controls define trigger points within an input signal. The SLOPE switch defines the portion of an input signal within which a trigger will be recognized. The LEVEL dial specifies a voltage that, if present in the selected portion of the input signal, constitutes a trigger. A trigger is nothing more than a signal level that, when met or exceeded in the specified portion of the input signal, causes the recorder to do either of the following:

- Acquire waveform data and store it for replay in any of the MT-9500's varied playback formats
- Toggle between two preset speeds when in the dual speed mode

To accomplish triggered data captures, your recorder must be equipped with the Data Capture option (DC-95). This option enables the recorder to acquire, store, and playback waveform data.

The controls of the trigger definition group are used to initiate, define, or monitor triggers as described below.

TRIG This control allows you to initiate triggers manually. Manual triggers result in either on-demand data captures or toggling between the two speeds you have predefined for the dual-speed mode. SLOPE and LEVEL settings are irrelevant to manually initiated triggers.

SLOPE This rotary switch has five settings: RISE, FALL, BOTH, EXT, and OFF. These settings define that portion of the input signal from which the trigger is to be derived.

If set to RISE, the trigger will be defined as occurring on the positive-going (rising) slope of the triggering signal.

If set to FALL, the trigger will be defined as occurring on the negative-going (falling) slope of the triggering signal.

If set to BOTH, triggers will be defined as occurring on the rising or falling slope (whichever occurs first).

If set to EXT, the data-capture or speed-toggling functions of the recorder will be initiated by a triggering signal introduced from an external source through the recorder's rear-panel BNC connector labeled TRIG or through the rear-panel UTILITY PORT.

If set to OFF, no trigger levels can be recognized by the recorder. The trigger function is disabled.

LEVEL The LEVEL control is a rotary dial that sets the level of voltage (either positive or negative) which, when present in the selected portion of an input signal, constitutes a trigger. The LEVEL control has three markings: 0, +, and -. When the dial is at 0 (zero), the voltage level is zero. As the dial is rotated clockwise (right, +), positive triggering voltages are set. As the dial is rotated counterclockwise (left, -) negative triggering voltages are set. The positive or negative voltage settings progressively increase as the control is rotated toward its left or right limits.

LAMP The trigger lamp is an unlabeled, circular LED indicator located between the SLOPE and LEVEL controls. The lamp illuminates each time a trigger is sensed. When the SLOPE switch is set to OFF, the trigger lamp will illuminate only as a result of manual triggers.

The use of triggers in relation to the MT-9500's data capture and playback capabilities is discussed in detail in paragraph 3-6 of this manual.

3-2.6 Power Switch

The black rocker switch labeled POWER is used to turn your recorder on and off. If you are using a signal conditioner card cage with the your recorder, the card cage can also be turned on or off through the recorder's POWER switch.

3-3 Rear Panel Input/Output Connections

The rear panel of the MT-9500 provides numerous interfaces for communicating with and controlling the recorder through a variety of peripheral devices and accessories. Figure 3-3 shows the MT-9500 rear panel. Refer to this figure in following the discussion below. Rear panel features include:

- Power Input receptacle
  (male receptacle accepts MT-9500 power cord)
- AUXILIARY AC POWER receptacle
  (female receptacle accepts accessory power cord)
- Fan vent
- LA-95 (AUX DISPLAY)
  (15-pin D-shell connector)
- ANALOG INPUT
  (25-pin D-shell connector)
- TALKING SIGNAL CONDITIONER
  (37-pin D-shell connector)
- IRIG OPTIONS
  (8 DIP switches)

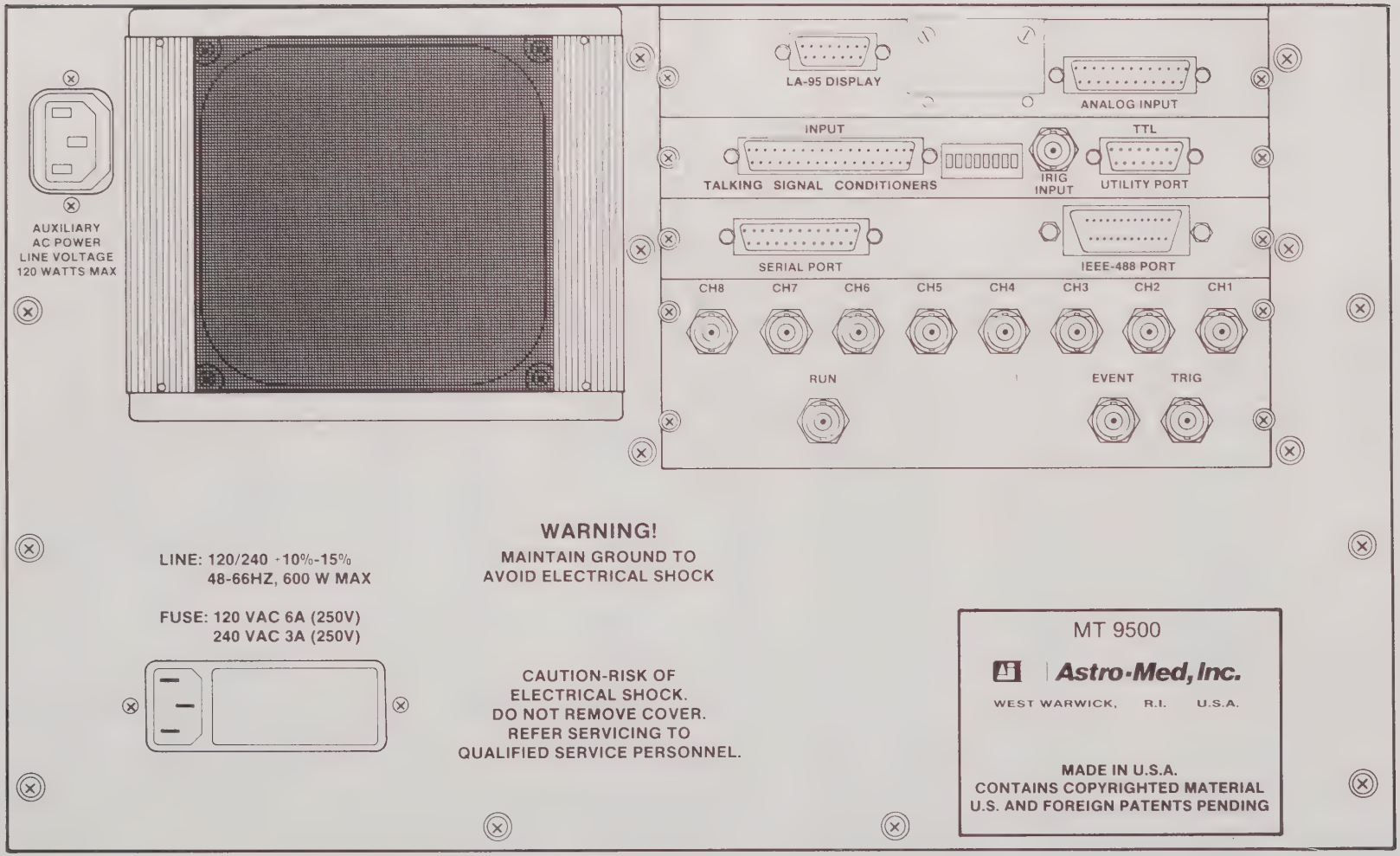

Figure 3-3. MT-9500 Rear Panel Connections

- IRIG INPUT
  (BNC connector)
- UTILITY PORT
  (15-pin D-shell connector)
- SERIAL PORT
  (25-pin D-shell connector)
- IEEE-488 PORT
  (25-pin connector)
- CH1 through CH8
  (eight analog input BNC connectors)
- RUN
  (BNC connector)
- EVENT
  (BNC connector)
- TRIG
  (BNC connector)

Each rear panel feature is discussed below.

3-3.1 Power Input Receptacle

The power input receptacle is a male connector consisting of three protruding contacts. The female end of the MT-9500's power cord is pushed onto these contacts and seated. The male end of the power cord is then inserted into an electrical outlet to supply power to the recorder. The power input receptacle is located in the lower left corner of the rear panel.

Power Requirements

Line:
95 - 132 VAC
190 - 264 VAC
48 - 440 hertz*
600 watts

*Consult factory for operation above 66 hertz.

Fuse:
120 volts, 6 amperes (250 V) 1 each
240 volts, 3 amperes (250 V) 1 each

3-3.2 Auxiliary AC Power Receptacle

The AUXILIARY AC POWER receptacle is a standard female electrical connector (120 W max) which is intended to accommodate the power cords of the card cage. It cannot be used for any other purpose. The receptacle is located in the upper left corner of the rear panel.

3-3.3 Fan Vent

The fan vent is a wire-mesh screened area through which air circulated by the ventilation fan enters the recorder.

3-3.4 LA-95 (Aux Display)

The LA-95 (AUX DISPLAY) receptacle is a 15-pin D-shell connector to which the interface cable of the LA-95 accessory (LED Display, paragraph 1-6.1) attaches.

CAUTION

Power to both the recorder and the LA-95 must be OFF before connecting the LED array to the MT-9500. The LA-95 could suffer electrical damage if this caution is not strictly observed.

3-3.5 Analog Input

The ANALOG INPUT receptacle is a 25-pin D-shell connector used to input analog data into the recorder. This D-shell connector can be used in place of the eight BNC analog connectors discussed in 3-3.12 below.

ANALOG INPUT Receptacle Pin Connections

Description		Pin #	Description		Pin #
Channel	1+	2	Channel	6+	12
Channel	1-	3	Channel	6-	13
Channel	2+	4	Channel	7+	14
Channel	2-	5	Channel	7-	15
Channel	3+	6	Channel	8+	16
Channel	3-	7	Channel	8-	17
Channel	4+	8	Trigger		18
Channel	4-	9	Trigger Common		19
Channel	5+	10	Marker		20
Channel	5-	11	Marker Common		21

3-3.6 "Talking" Signal Conditioner

The TALKING SIGNAL CONDITIONER receptacle is a 37-pin D-shell connector used exclusively with the Astro-Med C-950 Signal Conditioner Card Cage to provide the recorder with signal conditioner status data. The data transmitted can be printed with the recorder's waveform trace outputs. Option AP-95 must be ordered to enable printing of signal conditioner status.

3-3.7 IRIG Options

The IRIG time communication option of the MT-9500 recorder is called IRIG-95. The IRIG-95 option allows the recorder to decode modulated or demodulated NASA 36 and IRIG A, B, H time codes. When set to IRIG time, the recorder's internal time and date clock is overridden.

The IRIG OPTIONS control is a series of eight DIP switches that are individually set to establish IRIG time within the recorder. The switches are "on" when they are positioned "up" in their slots. The switches are "off" when they are positioned "down" in their slots. The DIP switches are used in association with the IRIG INPUT BNC connector discussed in paragraph 3-3.8.

DIP switch settings for the IRIG options are:

	S1	S2	S3	S4	S5	S6	S7	S8
Normal Time	on	on	*	off	off	*	X	X
IRIG A	off	on	*	off	off	*	X	X
IRIG B	on	off	*	off	*	*	X	X
IRIG H	off	off	*	off	off	*	X	X
NASA 36	on	on	*	on	*	*	X	X
Remote Start/Stop:								
enable	*	*	on	*	*	*	X	X
disable	*	*	off	*	*	*	X	X
System Log Print Control:								
synchronized††					on	*	X	X
unsynchronized†					off	*	X	X
Communications Setup:								
original GPIB or RS-232	*	*	*	*	*	off	X	X
enhanced GPIP	*	*	*	*	*	on	X	X

X = switches reserved for future use. They should be placed in the "off" position. ††IRIG B and NASA 36 only. †All time codes.

3-3.8 IRIG Input

IRIG INPUT is a BNC connector used to input IRIG signals into the recorder for decoding by the IRIG-95 option. This connector is used with the appropriately set DIP switches (3-3.7 above) to implement the desired IRIG time code.

3-3.9 Utility Port

The UTILITY PORT receptacle is a multipurpose 15-pin D-shell connector used to communicate various externally generated commands to the recorder. The UTILITY PORT receptacle provides an alternative to the input functions of numerous rear-panel BNC connectors. This port enables you to input the following functions:

- System Event
  (Provides alternative to EVENT BNC connector)
- Eight independent channel events
- Remote start/stop
  (Provides alternative to RUN BNC connector)
- External trigger
  (Provides alternative to TRIG BNC connector)
- Sample clock input
  (Controls either motor speed or data-capture rate)

UTILITY PORT Receptacle Pin Connections

Description*	Pin #	Description	Pin #
/System Event	1	/Event 8 (optional)	9
/Event 1 (optional)	2	Remote Start/Stop	10
/Event 2 (optional)	3	Reserved	11
/Event 3 (optional)	4	External Trigger	12
/Event 4 (optional)	5	Ground	13
/Event 5 (optional)	6	Reserved	14
/Event 6 (optional)	7	Sample Clock	15
/Event 7 (optional)	8		

*The symbol "/" indicates a TTL active low.

3-3.10 Serial Port (RS-232 Interface)

The SERIAL PORT receptacle is a 25-pin D-shell connector that is used as the RS-232 communications interface between the MT-9500 and various host-computer configurations. Control of the MT-9500 by host computer is documented in the MT-9500/MT-8800 Host-Control Operations Manual. Pin connection data for the SERIAL PORT interface are provided in the table below.

SERIAL PORT Receptacle Pin Connections

Description	Pin #	Source
RXD	2	Host
TXD	3	MT-9500
CTS	4	*
RTS	5	*
DTR**	6	MT-9500
Common	7	-
Reserved***	10	-
Reserved***	12	-
Reserved***	13	-
Reserved***	14	-
Reserved***	16	-
DSR**	20	Host
Reserved***	23	-
Reserved***	24	-

8 bits, no parity, 2 stop bits
(Baud rate 300, 1200, 9600, 19.2k)

*Pins 4 and 5 are connected internally.

**DTR is asserted by the MT9500 when the recorder is ready to recieve data from the host. DSR must be asserted to assure that no data are lost. In certain cases, the MT9500 may be run at 300 Baud with DTR and DSR shorted at the recorder and host. This is not generally recommended and is not supported but may operate on some systems.

***Reserve pins may have active voltage. Do not use.

3-3.11 IEEE-488 Port

The IEEE-488 PORT is a connector that is used as the IEEE communications interface between the MT-9500 and various host-computer configurations. Control of the MT-9500 by host computer is documented in the MT-9500/MT-8800 Host-Control Operations Manual. Pin connection data for the IEEE-488 PORT interface are provided in the table below.

IEEE-488 PORT Receptacle Pin Connections

Description	Pin #	Description	Pin #
DIO1	1	DIO5	13
DIO2	2	DIO6	14
DIO3	3	DIO7	15
DIO4	4	DIO8	16
EOI	5	REN	17
DAV	6	GROUND (6)	18
NRFD	7	GROUND (7)	19
NDAC	8	GROUND (8)	20
IFC	9	GROUND (9)	21
SRQ	10	GROUND (10)	22
ATN	11	GROUND (11)	23
SHIELD	12	GROUND LOGIC	24

GROUND (X) = the signal ground return of the referenced contact.

3-3.12 CH1 Through CH8 BNC Connectors

The rear panel of the recorder contains eight individual analog input-signal BNC connectors arranged in a horizontal row. From right to left, these BNC connectors are labeled:

CH8, CH7, CH6, CH5, CH4, CH3, CH2, CH1.

The connectors can be used in place of the 25-pin ANALOG INPUT receptacle to input analog waveform data. Do not use the these BNC connectors and the ANALOG INPUT receptacle at the same time.

3-3.13 Run

The RUN BNC connector permits you to turn the recorder on or off from an external source. The on or off action can be initiated either by a switch closure or a TTL low.

3-3.14 Event

The EVENT BNC connector enables you to mark a system event through an external source when your MT-9500 is operating in the real-time mode. The on or off action can be initiated either by a switch closure or a TTL low.

3-3.15 Trig

The TRIG BNC connector allows you to implement a trigger from an external source through a switch closure or TTL Low when the front-panel trigger slope is set to EXT (external). The trigger can be used to initiate either a data capture or dual-speed toggling.

3-3.16 Trimmer Potentiometers

Eight trimmer potentiometers (figure 3-4) allow you to change the factory-preset gain of each channel of your recorder. The eight potentiometers are located immediately to the left of the rear-panel ANALOG INPUT. They are behind a small (approximately 1 1/2 inch by 1 inch), unmarked plate. The plate is secured at its top by two screws. The potentiometers are arranged in a horizontal line and consecutively labeled in descending order CH8, CH7, ... CH1. Using the procedure given below, each potentiometer can be used to adjust the gain for its corresponding channel to a maximum of +/- 2 volts full scale.

NOTE

The output of Astro-Med signal conditioners has been calibrated to 10 mV per grid division to ensure total compatibility with the CAL settings of the MT-9500. If you alter the gain on any of the recorder's eight recording channels, the compatibility between the recorder's gain settings and the signal conditioner settings is lost for the altered channel. Therefore, **signal conditioners will not provide valid data** if you alter the gain as described below.

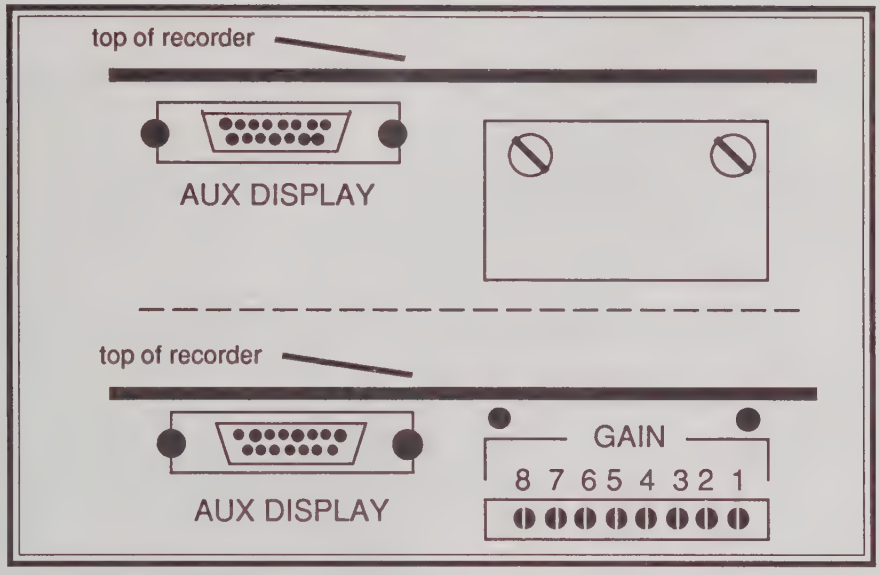

Figure 3-4. Rear-Panel Trimmer Potentiometers (covered and exposed)

1. **Remove the two screws securing the trimmer potentiometer coverplate. Set the screws and the plate aside.**

   The trimmer potentiometers are now exposed and can be turned to adjust individual channel gain.

2. **Turn the recorder on and place it into eight-channel real-time operation.**

   If your recorder is equipped with the Overlap Mode option (OM-95), you can place the recorder into the Overlap mode to increase the accuracy of this gain-adjustment procedure.

3. **On the channel you wish to adjust, set the CAL/UNCAL/GND switch to GND.**

   The trace signal is brought to ground level resulting in a flat-line trace.

4. **Using the ZERO control of the channel you wish to adjust, align the flat-line trace with the right border of the channel grid (as viewed from the recorder's front).**

5. **After aligning the trace to the right, set the CAL/UNCAL/GND switch to CAL.**

6. **Connect a calibrated DC voltage source either to**

   - **the recorder's 25-pin analog input D-shell connector, or**
   - **any of the eight analog input BNC connectors (CH1 - CH8)**

> **NOTE**
>
> The accuracy of the this gain-adjustment procedure is directly dependent on the the accuracy of the calibrated DC voltage source.

7. **Set the full scale calibrated DC voltage to the level you desire (±2 volts max.).**

8. **Use a small screwdriver to rotate the adjustment screw of the trimmer potentiometer corresponding to the channel you wish to adjust. Turn the adjustment screw until the calibrated DC signal trace aligns with the left border of the channel grid (as viewed from the recorder's front).**

   The full scale gain calibration of the selected channel has been ajusted when the calibrated DC signal trace aligns with the left border of the channel grid.

9. **With the trimmer potentiometer cover plate removed, repeat steps 2 through 8 for each channel you wish to adjust.**

10. **Disconnect the calibrated DC voltage source from the input receptacle (ANALOG INPUT D-shell or BNC connector).**

11. **Reattach the trimmer potentiometer cover plate with its two screws.**

3-4 Recorder Setup

Before entering your recorder into any mode of operation, you must complete all of the applicable installation procedures described in section 2, "Installation". When you have finished installing your MT-9500 and have familiarized yourself with its connections and controls, you can prepare the instrument for recording. To prepare for recording: (1) load the recorder with Z-fold thermal paper or with roll thermal paper if the recorder is being used with the rewinder accessory (RW-95), (2) turn the recorder on, (3) set the time and date of the instrument's internal clock, (4) establish the desired recorder setups, and (5) enter the unit into the desired operational mode. Each of these setup procedures is described below.

3-4.1 Loading Z-Fold Thermal Paper

Please note that some thermal papers can leave a residue which will eventually clog the recorder's printheads. Astro-Med chart paper is manufactured to exacting standards that eliminate this potential problem. For best results, consider using Astro-Med thermal Z-fold chart paper regularly.

Figure 3-5 illustrates the process of loading the recorder with a 500-sheet pack of Z-fold thermal paper. The recorder can be either on or off during this paper loading procedure. Follow the step by step instructions below to insert and position the paper for data recording.

1. **Remove the Z-fold thermal paper from its box and locate the "THIS SIDE UP AND IN FIRST" stamp at the top of the paper. Note the two directional arrows on the stamp.**

   Each sheet of Z-fold chart paper is marked with a black rectangle referred to as the index mark or top-of-form mark. This is used by the recorder to position the paper to a point just below the Z-fold perforation.

2. **Take hold of the lip of the paper-chamber door and pull downward until the door is fully open (horizontal to the surface on which the recorder rests).**

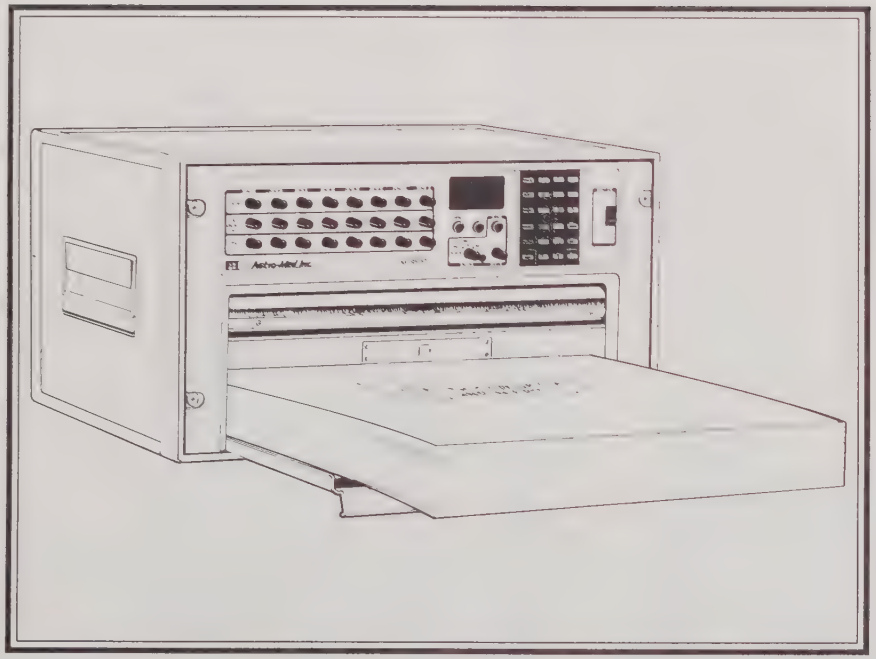

position paper for insertion

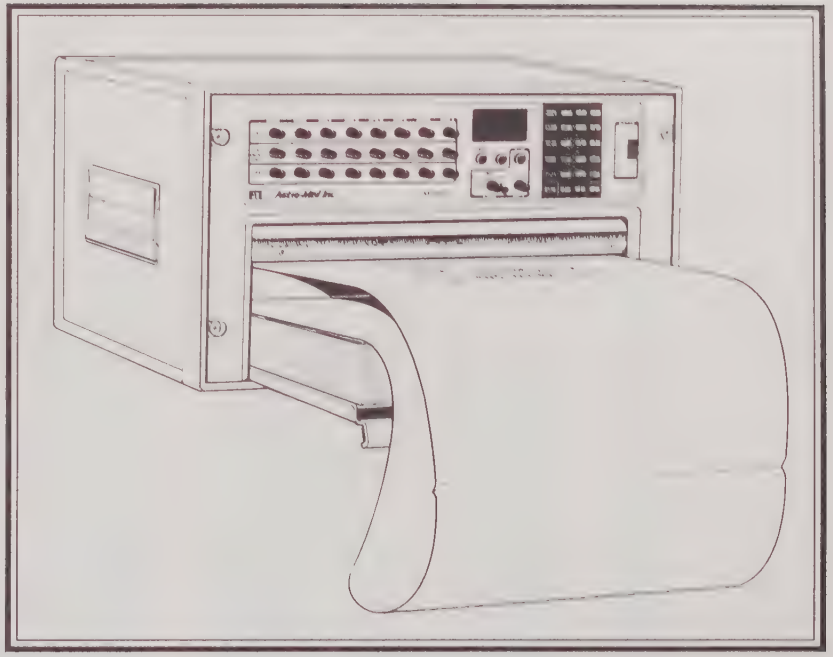

insert paper lead beneath drive roller

Figure 3-5. Loading Z-Fold Thermal Paper

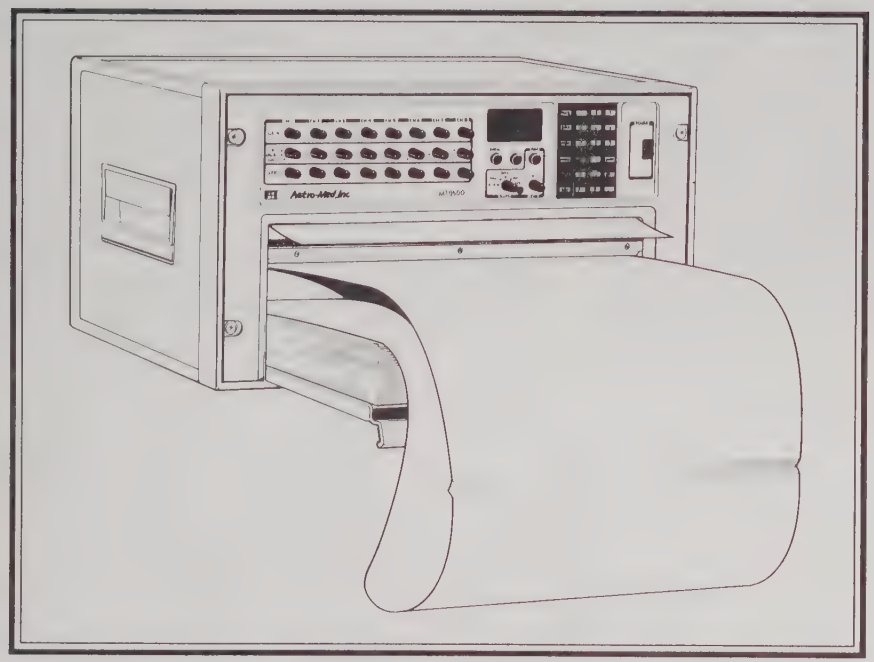

paper lead exits above drive roller

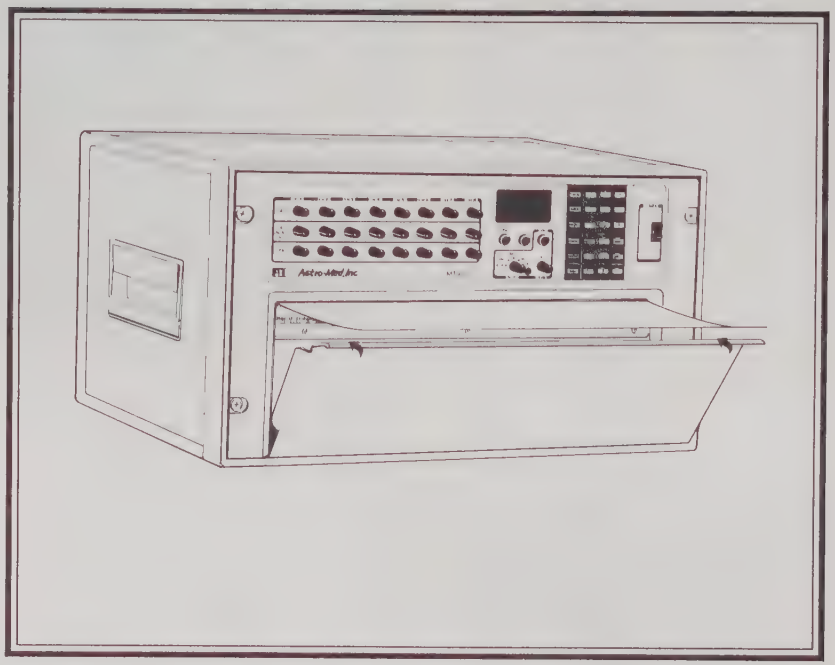

fully insert paper pack; close door

Figure 3-5. Loading Z-Fold Thermal Paper (continued)

3. **Place the paper into the paper chamber making sure that the stamped directional arrows point to the rear of the paper chamber.**

4. **Pull the stamped top sheet of the paper pack out of the recorder.**

5. **Insert the top sheet (arrows pointing to the rear of the recorder) into the slot beneath the drive roller.**

   The drive roller is located directly under the front panel controls. Refer to figure 3-5 for a picture of this process.

6. **Manually feed the paper into the recorder and around the drive roller by carefully sliding the paper forward.**

7. **Push the paper forward until it passes around the drive roller and begins to exit the recorder at the slot above the drive roller.**

8. **When the paper begins to exit the recorder, evenly pull out a length of approximately six inches or more.**

9. **Ensure that the chart-paper pack is fully inserted into the paper chamber by pushing it to the rear of the chamber.**

10. **Hold the six-inch paper lead out of your way and close the paper-chamber door.**

    You will hear a slight click when the door closes and feel it snap secure. The recorder is now loaded with a pack of thermal Z-fold chart paper.

11. **If you have loaded the paper with the recorder turned off, turn the recorder on by flicking the POWER rocker switch to the "on" position.**

The sheets of the paper pack are numbered in descending order from 500 to 1. The page numbers appear along the center line of the chart paper. This keeps you exactly informed about the number of chart-paper sheets remaining in the recorder.

If no paper is in the recorder or if the paper pack has been incorrectly inserted, the recorder will display an <INTRLOCK> error message on its LED display after it has been turned on. An <INTRLOCK> error will also occur if the chart paper runs out during recording. The recorder will not function during an <INTRLOCK> error. To correct this error and return the recorder to a <READY> operational condition, either:

- Insert chart paper into the empty recorder following steps 1 through 10 above, or

- Remove the incorrectly installed chart paper and properly reinsert it following steps 1 through 10 above.

3-4.2 Loading Roll Thermal Paper

Please note that some thermal papers can leave a residue which will eventually clog the recorder's printheads. Astro-Med chart paper is manufactured to exacting standards that eliminate this potential problem. For best results, consider using Astro-Med thermal roll chart paper regularly.

Figure 3-6 illustrates:

- Loading the Rewinder accessory (RW-95) with a roll of thermal paper

- Threading the roll thermal paper through the recorder

- Securing the paper to the rewinder's take-up spool for automatic collection

Roll thermal paper can only be used by the recorder when the recorder is equipped with the Rewinder accessory. The roll paper supply is located in the rewinder. The instructions provided below assume that your MT-9500 and a Rewinder accessory have been correctly attached to one another. If your recorder is being used with the Writing Table accessory (WT-95), the writing table must be removed before the chart paper can be loaded. In the steps given below, "left" refers to the left of the rewinder as you view it from the front. "Right" refers to the right of the rewinder as viewed from the front.

1. Remove the Writing Table accessory if present.

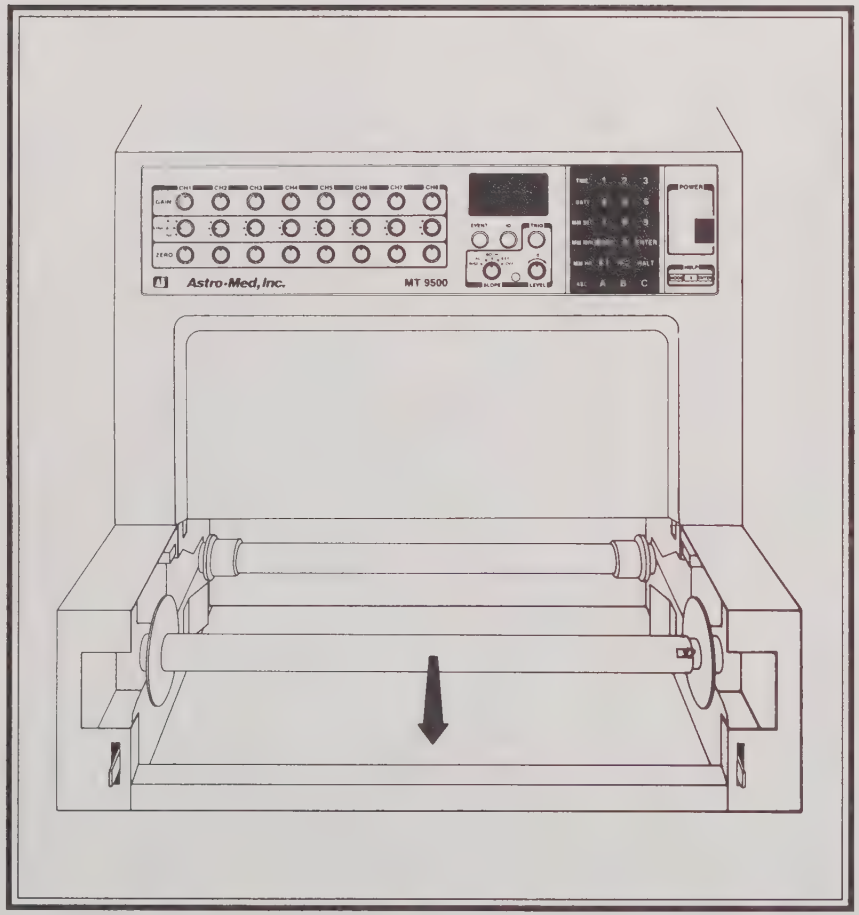

remove paper-takeup reel

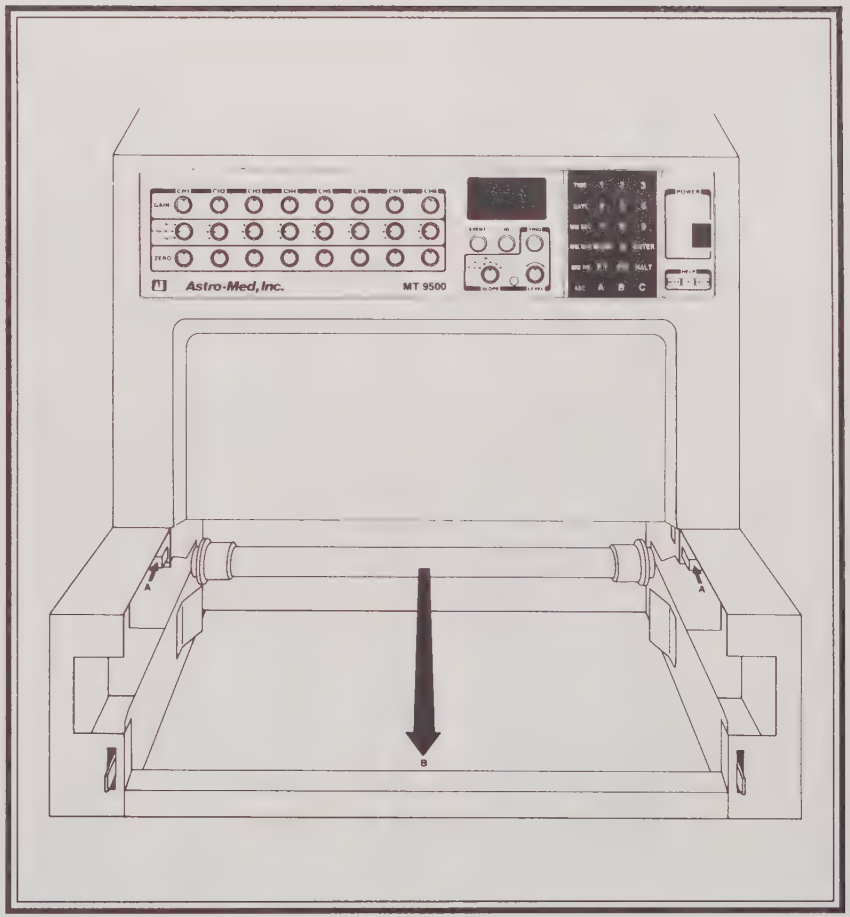

remove paper-supply reel

Figure 3-6. Loading Roll Thermal Paper

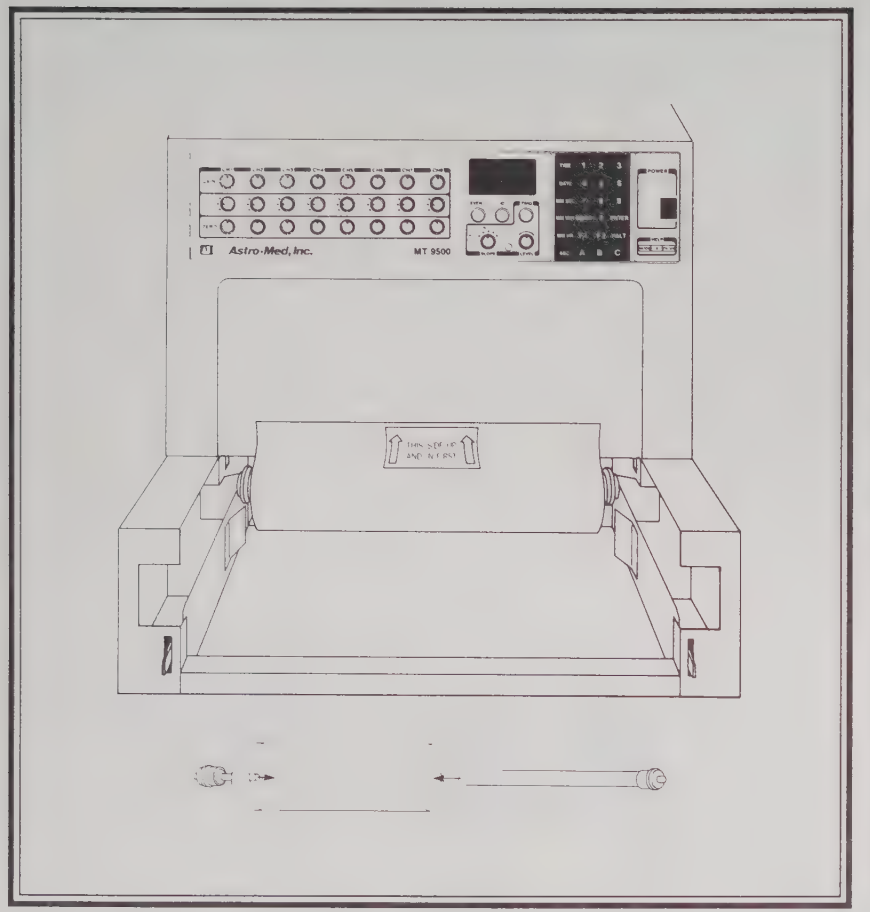

insert loaded paper-supply reel

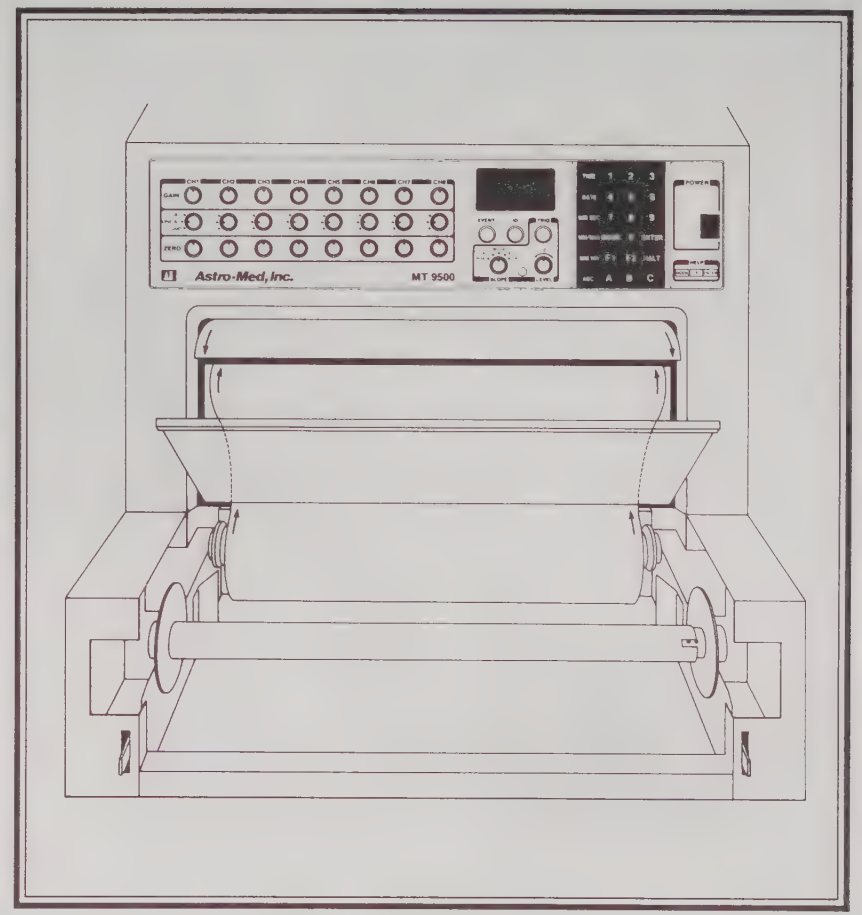

feed paper lead through recorder

Figure 3-6. Loading Roll Thermal Paper (continued)

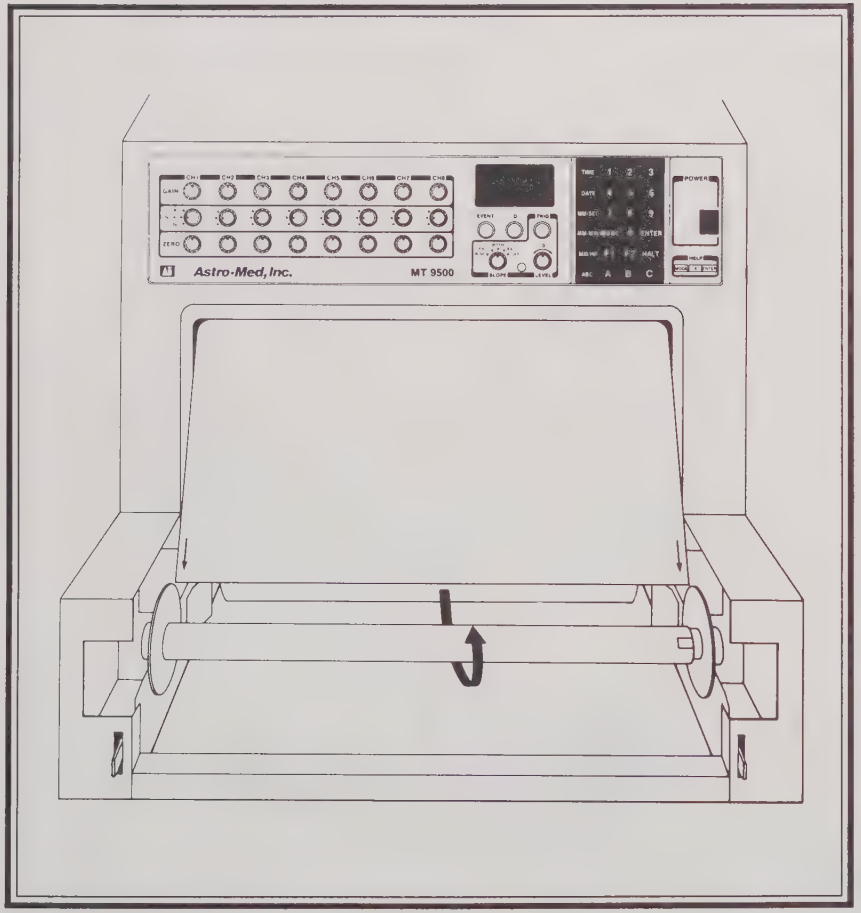

pull paper to paper-takeup reel

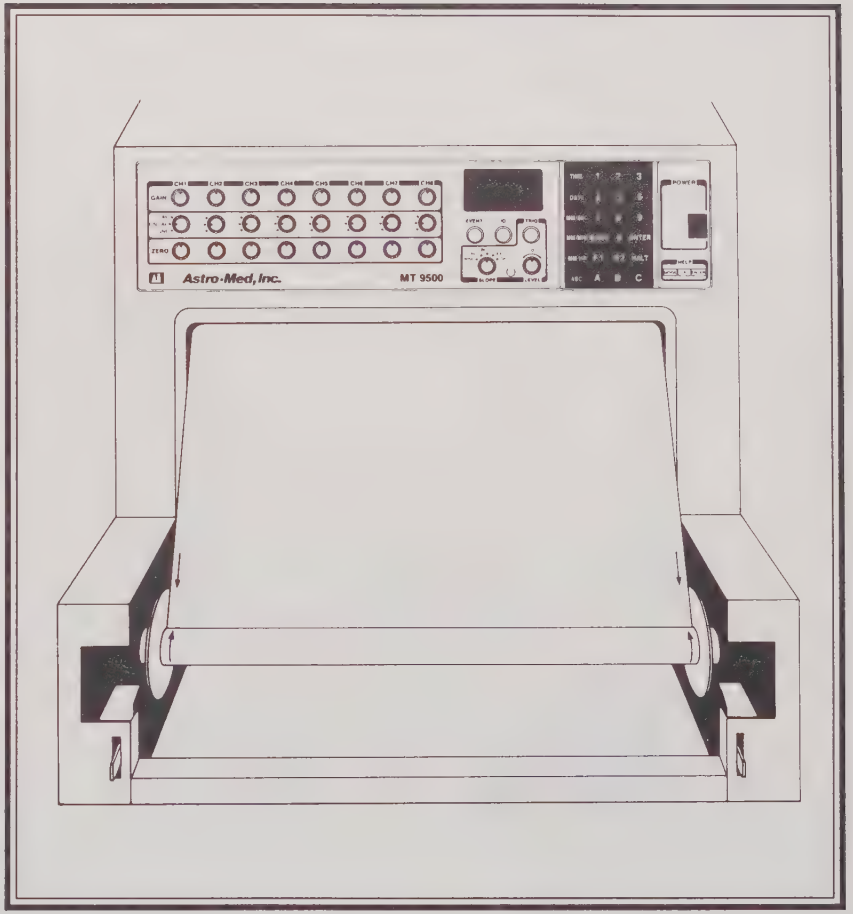

attach paper lead to paper-takeup reel

Figure 3-6. Loading Roll Thermal Paper (continued)

2. **As described below, remove the rewinder's chart paper take-up reel by individually lifting the exterior latches that visibly protrude from the slots in the rewinder's left and right fron tcorner covers. These latches secure the chart paper take-up reel to the rewinder. The take-up reel is the rewinder's front-most reel.**

   - **Continuously lift the left exterior latch, grasp the left hub of the core of the take-up reel, and pull the core toward you. This will free the left hub of the take-up reel.**

   - **Continuously lift the right exterior latch, grasp the right hub of the core of the take-up reel, and pull the core toward you. This will free the right hub of the take-up reel.**

   - **Grasp the freed take-up reel and remove it from the rewinder.**

3. **Remove any chart paper accumulated on the take-up reel.**

   This is done by grasping, pulling, and removing the circular left hub of the take-up reel. The left hub of the reel does not have a gear on it. The right hub of the reel has a gear on it. The spooled paper will have been rewound onto a cardboard tube core. Slide the rewound paper/core off the take-up reel.

4. **Place an empty cardboard core on the take-up reel and reinstall the circular left hub of the take-up reel. Set the take-up reel aside.**

5. **Unlatch the supply reel for removal from the rewinder.**

   Reach inside the front of the rewinder and find the latches that secure the chart-paper supply reel. The supply reel is the rewinder's inner-most reel. The latches that secure the supply reel are located near the upper left and upper right sides of the rewinder's interior. You can feel these inner latches extending toward the front of the rewinder. The latches are spring loaded and their tips are bent to form a flat surface for pushing. Individually push each latch back and down. The latches will snap into place and free the supply reel for removal.

6. **Reach into the interior of the rewinder and remove the supply reel.**

7. **The supply reel has one removable hub. Try each hub of the supply reel and remove the detachable hub.**

   Remove and save the empty core. You will be able to use the empty core on the rewinder's take-up reel. When you reinsert the supply reel (steps 8 - 10), the removable hub can be positioned on either the left or right side of the rewinder. However, the roll thermal paper must be oriented as described in steps 8 and 9 below.

8. **Place a roll of thermal paper on the supply reel and reinsert the removed hub of the reel.**

   The roll thermal paper carries a stamp reading "THIS SIDE UP AND IN FIRST." *Two directional arrows are also on the stamp. Make sure that the* "THIS SIDE UP AND IN FIRST" *stamp is right-side up and readable. The two directional arrows must point to the interior of the rewinder. Each sheet of Z-fold chart paper is marked with a black rectangle referred to as the index mark or top-of-form mark.This is used by the recorder to position the paper to a point just below the Z-fold perforation. Roll thermal paper has an index mark every 280 mm.*

9. **Place the supply reel with its new roll of thermal paper horizontally into the rewinder resting across the interior rails.**

   Make sure that the "THIS SIDE UP AND IN FIRST" *stamp is right-side up and readable. The two directional arrows must point to the interior of the rewinder.*

10. **Slide the loaded supply reel into the interior of the rewinder along the rails on which it rests until the reel drops into place.**

    You will feel the hubs of the reel drop into place when the reel has been inserted as far as it will go.

11. **When the supply reel has dropped into place, individually press and slightly push up the left and right interior latches that secure the reel.**

    When pressed and slightly pushed upwards, the latches will snap forward into place and hold the reel in proper position.

12. **Take the end of the thermal roll and unwind six to twelve inches of paper. Slide the paper through the space available at the bottom of the paper-chamber door.**

    The paper chamber door is hinged at the bottom. When the door is partially opened, space is created and the paper can be fed through easily.

13. **With the paper chamber door open, slide the end of the paper into the slot beneath the recorder's drive roller.**

14. **Push the paper forward until it passes around the drive roller and begins to exit the recorder at the slot above the drive roller. Close the paper-chamber door.**

15. **Reinsert the paper take-up reel with its empty core (step 5 above) by placing it horizontally in front of the left and right take-up reel latches (step 1) near the front of the rewinder. The gear on the take-up reel must be to the right as you face the rewinder. Push the take-up reel against the latches. The latches will rise and the take-up reel will fall into position as the latches snap down to secure it.**

16. **Pull the paper through the slot above the drive roller and down to the rewinder's take-up reel. Pass the paper behind and under the core of the take-up reel. Bring the paper up to the front of the take-up reel. Fold the paper back several inches and manually tuck the creased paper around the take-up reel to secure the paper on the core. As necessary, use your hand to turn the take-up reel to wind several inches of paper securely onto the core.**

17. **Press the circular power button on the front left panel of the rewinder to turn the accessory on.**

18. **Turn the recorder on.**

You are now ready to use the rewinder to spool chart paper as it exits the recorder. The rewinder has a constant-torque motor that applies proper tension to the chart paper. The rewinder works with all recorder chart-paper speeds.

The paper roll is marked into lengths numbered in descending order from 500 to 1. The numbers appear along the center line of the chart paper. This helps to keep you informed regarding the amount of chart paper remaining in the recorder.

If no paper is in the recorder or if the paper roll has been incorrectly inserted, the recorder will display an <INTRLOCK> error message on its LED display after it has been turned on. An <INTRLOCK> error will also occur if the chart paper runs out during recording. The recorder will not function during an <INTRLOCK> error.

To correct this error and return the recorder to a <READY> operational condition, either:

- Insert chart paper into the empty recorder following steps 1 through 18 above, or

- Remove the incorrectly installed chart paper and properly reinsert it following steps 1 through 18 above

3-4.3 Time and Date: Setting the Recorder's Internal Clock and Calendar

The front-panel keypad is used to set the time and date of the MT-9500's internal clock. The recorder's internal clock determines the time and date that appear on the system log and serves as the reference point for all recorder activities that require time/date data.

To set the recorder's internal clock

1. **Press the [TIME] key on the front-panel keypad.**

   The LED display will read <00.00> *or will reflect the time based on the last setting of the clock.*

2. **Press numeric keys [0] through [9] as required to set the clock to the current time.**

   As the numbers are pressed, they are displayed on the front-panel LED display. The time must be entered in 24-hour format. For example, 3:32 pm is 15:32 hours. Use leading zeros as necessary.

3. **Press the [ENTER] key after you have input the current time.**

   The LED display reads <READY>. *You can proceed. (The data have been accepted and retained.)*

If you have accidently entered a combination of numbers representing a numerically impossible time (e.g., 13:99), the display will briefly read <INVALID> and will revert to the previouly entered time. Enter the appropriate time to correct this condition.

The battery that powers the recorder's internal clock may become depleted if the recorder is shut off for a number of consecutive days. This could invalidate the time and date information stored in the recorder. If this occurs, simply reset the time and date upon recorder power-up.

To set recorder's internal date

1. **Press the [DATE] key on the front-panel keypad.**

   The LED display will read <01/01/88> *or will display a date reflecting the last setting of the internal calendar.*

2. **Press numeric keys [0] through [9] as required to set the recorder to the current date.**

   As the numbers are pressed, they are displayed on the front-panel LED display. Use leading zeros as required; for example, 03/25/88.

3. **Press the [ENTER] key after you have input the current date.**

   The LED display reads <READY>. *You can proceed. (The data have been accepted and retained.)*

If you have accidently entered a combination of numbers in the month or day number positions of the LED display (MM/DD/YY) that represents a numerically impossible date (e.g., 13/48/88), the display will briefly read <INVALID> and will revert to the previouly entered date. Enter the current date to correct this condition.

The battery that powers the recorder's internal clock may become depleted if the recorder is shut off for a number of consecutive days. This could invalidate the time and date information stored in the recorder. If this occurs, simply reset the time and date upon recorder power-up. The battery will gradually recharge during operation.

3-4.4 Entering Operational Modes

If you have followed the procedures given to this point, you are now ready to define the recorder's operational setup functions and to enter the recorder into an operational mode. In accomplishing these tasks, you will make extensive use of the recorder's front-panel data-entry keypad (3-2.1).

Your recorder is equipped with a standard operational mode: *Real-Time Operation*. If you have ordered the Data Capture option (DC-95), your recorder will have an additional operational mode: *Data Capture and Playback*. These two operational modes and the capabilities they provide are discussed in the paragraphs that follow. We begin with the recorder's basic and versatile capability: *Real-Time Operation*.

3-5 Real-Time Operation

In the real-time operational mode, the MT-9500 functions as a real-time, high-speed, analog oscillographic recorder. Three modes are available to you during real-time operation of the recorder:

Eight-Channel Real-Time Recording	MODE 0
Overlap Real-Time Recording	MODE 1
Dual Speed Operation	MODE 4

If the Datalogger option (DL-95) is installed in your recorder, a fourth mode is available during real-time operation: MODE 9.

The Datalogger option enables the recorder to convert waveform data into tables of engineering units that you specify.

Before discussing the individual real-time recording modes, it is necessary to discuss a number of real-time recording setups. The waveform output of the real-time recording modes is affected by each real-time recording setup. If you do not enter your own setups, the recorder will use the pre-established, factory-default setups of table 3-3.

Paragraph 3-5.1 defines the MT-9500's real-time recording setups.

3-5.1 Real-Time Recording Setups

Table 3-3 lists the MT-9500's real-time recording setups and their generic keying sequences. Each of the setups will be individually discussed in the paragraphs that follow. Notice that each recording setup has an influence on the recorder's output. Using the real-time setups, you can, for instance: turn the grid on or off; set the recorder's channel order; reverse an input signal's polarity; set the desired chart-paper speed; and much more.

Table 3-4 lists the factory default real-time setups of the recorder. If you do not wish to key-in your own setups, the recorder will automatically use the factory defaults.

NOTE

It is always sensible to establish your initial recording setups before using your recorder in a task. However, you can access and alter your setups **at any time during real-time operation**. You can change modes, functions, recorder speeds, etc. instantly simply by entering the keying sequences described below.

3-5.1.1 Time Setup. Refer to paragraph 3-4.3 for an explanation of setting the recorder's internal clock.

3-5.1.2 Date Setup. Refer to paragraph 3-4.3 for an explanation of setting the recorder's internal date.

Table 3-3. Recorder Real-Time Setups

Setup	Keying Sequence
Time	[TIME] [H] [H] [M] [M] [ENTER]
Date	[DATE] [M] [M] [D] [D] [Y] [Y] [ENTER]
Speed	[MM/SEC] or [MM/MIN]or [MM/HR] [X] [X] [X] [ENTER]
Insta-Speeds	[ABC] [A] or [B] or [C] [MM/SEC] or [MM/MIN] or [MM/HR] [X] [X] [X] [ENTER]
Channel Order Set	[F1] [0] [ENTER]
Grid Printing On/Off	[F1] [1] [ENTER]
Event or Annotation	[F1] [2] [ENTER]
Signal Polarity Reverse	[F1] [7] [ENTER]
Annotation Entry	[F2] [0] [ENTER]
Factory Defaults	[F2] [2] [ENTER]
Timed Operation	[F2] [3] [ENTER]
Snapshot Sample Rate Clock Source	[F2] [5] [ENTER]
Communications Type (local or host)	[F2] [6] [ENTER]
Real-Time Motor Speed Source	[F2] [7] [ENTER]
Signal Conditioner Print Status	[F2] [8] [ENTER]

Table 3-4. Factory Default Real-Time Setups

Setup	Factory Default Setting*
Time	00.00
Date	01/01/88
Speed	025 mm/sec
Insta-Speeds	A = 001 mm/s B = 025 mm/s C = 050 mm/s
Channel Order Set	12345678**
Grid Printing On/Off	On
Event or Annotation	AAAAAAAA**
Signal Polarity Reverse	NNNNNNNN**
Annotation Entry	First eight buffer spaces of each channel programed to read: CHANNEL X (x = appropriate channel number)
Timed Operation	Off
Snapshot Sample Rate Clock Source	INTERNAL
Communications Type (local or host)	KEYPAD
Real-Time Motor Speed Source	INTERNAL
Signal Conditioner Print Status	NNNNNNNN**

*This list applies to a recorder equipped with all firmware options.

**The eight characters of the display represent each of the recorder's eight channels.

3-5.1.3 Speed Setup. The speed setup establishes the speed at which chart paper runs.

Either accept the factory default listed in table 3-2 by pressing [ENTER] or follow the steps given below to set the chart speed. The data you enter will appear on the front-panel LED display.

1. **Press the [MM/SEC], [MM/MIN], or [MM/HR] key to specify whether you want the chart paper to be output in millimeters per second, per minute, or per hour.**

   The LED display will read the factory default or as last set.

2. **Press three numeric keys from [0] through [9] to specify the speed at which you want the paper to run. Use leading zeros as necessary.**

3. **Press the [ENTER] key to instruct the recorder to accept the data you just entered.**

   The LED display reads <READY>. The data have been accepted and you can proceed.

4. **Program each of the remaining keys ([MM/SEC], [MM/MIN], or [MM/HR]) following steps 1 through 3 above.**

3-5.1.4 Insta-Speed Setups. The insta-speed setup allows you to preprogram three chart-paper speeds. You can then instantly access these speeds by pressing the keypad's [A], [B], or [C] keys.

Either accept the factory defaults listed in table 3-2 or follow the steps given below to set the insta-speeds. The data you enter will appear on the front-panel LED display.

1. **Press the [ABC] (single) key.**

   The front panel LED displays reads: <A, B OR C>.

2. **Press the [A] key.**

   The LED display will either show the factory default or read as last set. Press [ENTER] *to accept the setting or set the* [A]*-key insta-speed as described below.*

3. **Press [MM/SEC], [MM/MIN], or [MM/HR] to specify the speed range at which you want the chart paper to run.**

   The LED display changes to reflect your selection: [MM/SEC], [MM/MIN], [MM/HR]. *The recorder defaults to* [MM/SEC].

4. **Press three numeric keys from [0] through [9] to specify the speed at which you want the paper to run.**

   The LED display will change to show the input speed.

5. **Press the [ENTER] key.**

   The LED display reads <READY>. *The data have been accepted and you can proceed.*

6. **Repeat steps 1 through 5 for keys [B] and [C].**

3-5.1.5 Timed Operation Setup. The timed-operation setup allows you to program the recorder (1) to start recording at a predetermined time, (2) to run the chart-paper at a predetermined speed, and (3) to stop recording at a predetermined time. This permits real-time recording without the presence of an operator.

The factory default sets timed operation to <TIMEROFF>. After you have accessed the timed-operation set-up, either:

- accept the factory default by repeatedly pressing [ENTER] to scroll through the setup until the LED reads <READY> or

- follow the steps given below to set timed operation of the recorder to your requirements.

The data you enter will appear on the front-panel LED display.

1. **Press the [F2] key.**

   The LED display reads <EDIT CH>.

2. **Press the [3] key.**

   The LED display reads <TIMER>.

3. **Press the [ENTER] key.**

The recorder will display the default setting, <8 CH RT>, *or the last setting. If the Overlap Waveform option (OM-95) is not installed, the overlap waveform feature,* <OVLAP RT>, *will not be available.*

If your recorder is equipped with the Overlap Waveform option, the LED display will read <8 CH RT> *or* <OVLAP RT> *depending on the last setting. If the display reads* <8 CH RT>, *this indicates that the recorder is set for eight-channel real-time recording and that recorder output will be formatted as eight individual 40 mm channels. Press* [ENTER] *if you desire eight-channel format.*

If you wish recorder output to be in overlapped format, press either the [A] *or* [C] *key. The LED display will read* <OVLAP RT>. *(Pressing either the* [A] *or* [C] *key causes the recorder to toggle between the* <8 CH RT> *format and the* <OVLAP RT> *format.) Press the* [ENTER] *key when the LED displays reads* <OVLAP RT> *to establish overlap format for recorder output. Two expanded grids each containing four overlapping waveforms are output.*

4. **Press the [ENTER] key.**

The LED display will read <ST 00.00> *or the last start time entered. Either accept the displayed start time by pressing* [ENTER] *or set the desired start time as described in step 5. (If you press* [ENTER], *the LED display will change to* <SP 00.00> *to allow you to set recording stop time.)*

5. **Press four numeric keys from [0] through [9] to enter the desired start time in 24-hour format. Use leading zeros as necessary.**

The LED display shows the numbers you enter.

6. **Press the [ENTER] key.**

The LED display will read <SP 00.00> *or the last stop time entered. Either accept the displayed stop time by pressing* [ENTER] *or set the desired stop time as described in step 7. (If you press* [ENTER], *the LED display will read either* <TIMEROFF> *or* <TIMER ON>.*)*

7. **Press four numeric keys from [0] through [9] to enter the desired stop time in 24-hour format. Use leading zeros as necessary.**

   The LED display shows the numbers you enter.

8. **Press the [ENTER] key.**

   The LED display will read <TIMEROFF>.

9. **Press either the [A] key or the [C] key.**

   The display will switch between <TIMEROFF> *and* <TIMER ON> *as youpress the key. When the display reads as you desire, press the* [ENTER] *key.*

   If you entered <TIMER ON> *and pressed the* [ENTER] *key, the LED display will alternately flash* <ON AT> *and the start time in 24-hour format that you entered in step 5 above. Confirm your start time and press* [HALT]. *The LED display reads* <READY>. *The data have been accepted and you can proceed.*

   If you entered <TIMEROFF> *and pressed the* [ENTER] *key, the LED display will read* <READY> *indicating that the recorder is ready to be placed into the mode or function of your choice. Because you entered* <TIMEROFF>, *timed operation of the recorder will not take place.*

3-5.1.6 Event or Annotation Setup.

The event or channel annotation setup is available only on those recorders equipped with both the Alphanumeric Printing option (AP-95) and the Event Marker option (EM-95).

The event or annotation setup allows you to specify whether event markers or alphanumeric data will be printed in the interchannel buffer spaces to the right of each channel.

NOTE

This setup only establishes whether event markers or alphanumeric data will appear in the interchannel buffers. It **does not** specify the content of the buffers, that is, it does not specify what alphanumeric data will be printed in the buffers. The Annotation Entry setup (paragraph 3-5.1.7) allows you to specify the alphanumeric data that will be printed in the buffers.

The factory default sets the LED display of the event or annotation setup to <AAAAAAAA> indicating that each of the eight recording channels will print alphanumeric content rather than event markers in the interchannel buffers. Either accept the factory defaults by pressing [ENTER] or follow the steps given below to set each channel to the desired status. The data you enter will appear on the front-panel LED display.

1. **Press the [F1] key.**

   The LED display reads <CH.ORDER>.

2. **Press the [2] key.**

   The LED display reads <EVT/TEXT>.

3. **Press the [ENTER] key.**

   The LED display reads the default, <AAAAAAAA>, *or as last set.*

4. **Press numeric keys [1] through [8]. (Pressing either the zero [0] key or the [9] key has no affect.)**

   Each digit represents its corresponding recording channel. As you press each key, the display for that channel will switch between:

   < A > *Indicating alphanumerics will be printed in the channel*

   < E > *Indicating an event marker will be printed in the channel*

   Switch each channel to the setting of your choice. Each channel can be individually and independently set.

5. Press the [ENTER] key.

The LED display reads <READY>. *The data have been accepted and you can proceed.*

3-5.1.7 Annotation Entry Setup.

The annotation entry setup is available only on those recorders equipped with the Alphanumeric Printing option (AP-95).

The annotation entry setup allows you to specify the characters that will be printed in the interchannel buffer of each recording channel when that channel has been set to alphanumeric printing as described in paragraph 3-5.1.6 above.

Each of the eight interchannel buffers contains 100 character spaces that can be individually changed. The 100 character spaces of each buffer can be scrolled through and changed as described below.

Suggestion: If you have the Keyboard accessory (KB-220), you can enter alphanumeric text directly into the interchannel buffers very conveniently without the necessity of performing the character-by-character process described below. If your work requires much alphanumeric entry, the KB-220 accessory can be a great help.

Factory defaults set the first ten character spaces of each interchannel buffer to read "CHANNEL #X" (where X is one number from 1 through 8). The procedure for changing these defaults is provided below. The data you enter will appear on the front-panel LED display.

1. Press the [F2] key.

The LED display reads <EDIT CH>. *This means that you have accessed the capability to edit (annotate) the alphanumeric content of the interchannel buffers.*

2. Press the [ENTER] key.

The display reads <BUFFER ?>.

3. **Press numeric keys [1] through [8] individually to access the interchannel buffer of your choice.**

   As each numeric key is pressed, the corresponding buffer number is shown on the LED display.

4. **Press the [ENTER] key.**

   The recorder accesses the selected buffer and the LED display reads <00 67 C> *or as last set. Initially, the recorder always accesses location* 00 *of the selected buffer.*

   The display will always consist of five characters: two first numbers, two middle numbers, and a final character. For instance, the factory default, <00 67 C>, *indicates that location* 00 *(first two numbers) within the selected buffer contains ASCII code* 67 *(middle two numbers). ASCII code 67 equates to the displayed upper-case* "C" *(final character). Therefore, upper-case* "C" *will be printed at this location within the selected buffer when hardcopy recorder output is obtained. Table 3-5 contains a complete list of the ASCII codes and their alphanumeric equivalents pertinent to MT-9500 operation.*

   By following steps 5 and 6, you can now:

   - scroll through and edit locations 00 through 99 of each interchannel buffer
   - access and edit the ASCII code that determines what character will be printed at the selected location within each buffer.

5. **Either accept the displayed location within the selected buffer (the first two digits of the LED display) or change the location. Change location within the buffer by scrolling through or by directly accessing the buffer using any of the following methods.**

   a. Press the [C] key to scroll forward and advance through each buffer location of the channel to a maximum location of 99.

      The first two digits of the LED display will change as the [C] *key is pressed to display the current location within the interchannel buffer.*

Table 3-5. Editing Interchannel Buffers: ASCII Codes (Decimal) and Character Equivalents

ASCII Code	Character	ASCII Code	Character
32	(space)	65	A
33	! (x)	66	B
34	"	67	C
35	# (x)	68	D
36	$	69	E
37	%	70	F
38	&	71	G
39	'	72	H
40	((x)	73	I
41	) (x)	74	J
42	*	75	K
43	+	76	L
44	,	77	M
45	-	78	N
46	.	79	O
47	/	80	P
48	0	81	Q
49	1	82	R
50	2	83	S
51	3	84	T
52	4	85	U
53	5	86	V
54	6	87	W
55	7	88	X
56	8	89	Y
57	9	90	Z
58	: (x)	91	[
59	; (x)	92	\ (x)
60	< (x)	93	]
61	=	94	^ (x)
62	> (x)	95	_
63	?		
64	@		

(x) The character for this ASCII code does not appear on LED display.

This table reflects the ASCII characters available under local control. Additional characters are available during host-control operation.

The middle two digits of the LED display will change as the [C] *key is pressed to show the ASCII code present at the displayed location.*

The final character of the display will change as the [C] *key is pressed to show the character equivalent of the displayed ASCII code.*

If the character equivalent of the ASCII code is a blank space (ASCII code 32) or a character that the LED display can't create, the final character of the display will not be shown.

Stop at the buffer location you wish to change. The first two digits of he LED display will not change after they reach 99.

b. Press the [A] key to scroll backward and reverse your way through the locations within the selected buffer from the maximum location of 99 down to 00.

The first two digits of the LED display will change as the [A] *key is pressed to display the current location within the interchannel buffer.*

The middle two digits of the LED display will change as the [A] *key is pressed to show the ASCII code present at the displayed location.*

The final character of the display will change as the [A] *key is pressed to show the character equivalent of the displayed ASCII code.*

If the character equivalent of the ASCII code is a blank space (ASCII code 32) or a character that the LED display can't create, the final character of the display will not be shown.

Stop at the buffer location you wish to change. The first two digits of the LED display will not change after they reach 00.

c. Press the [ABC] (single) key to immediately access the buffer location of your choice without scrolling.

The LED display reads <GO TO 00>. *Press any two numeric keys from* [0] *to* [9] *to specify the location of your choice within the buffer. Press* [ENTER]. *The LED display instantly shows: your choice of location within the buffer (the first two digits), the ASCII code (the last two digits) currently programmed for that location, and the character equivalent of the ASCII code (final character).*

If the character equivalent of the ASCII code is a blank space (ASCII code 32) or a character that the LED display can't create, the final character of the display will not be shown.

6. **Either accept the ASCII code displayed for the location within the buffer (the second two digits of the LED) or change the code by:**

   - **referring to table 3-3 for the two digit code of the letter, number, or character you wish to enter**
   - **using keys [1] through [9] to enter the selected ASCII code**

   The LED display will show the digits you enter as they are pressed. The character equivalent of the input ASCII code will appear as the final character of the display.

   If the character equivalent of the ASCII code is a blank space (ASCII code 32) or a character that the LED display can't create, the final character of the display will not be shown.

7. **Press the [HALT] key to instruct the recorder to accept the data you just entered without clearing the remainder of the buffer locations.**

   The LED display reads <READY>. *The data have been accepted and you can proceed.*

Pressing the [HALT] *key is the preferred method for finalizing data entry when defining the annotation entry setup. It is important to note that using the* [HALT] *key* ***enters*** *the data you changed and* ***preserves*** *the data in the buffer locations that you left unchanged.*

8. **Press the [ENTER] key to instruct the recorder to accept the data you just entered and to clear all data from the remaining buffer locations.**

   The LED display reads <READY>. *The data have been accepted and you can proceed.*

   When you press the [ENTER] *key, the data you just entered are accepted and retained. However, be very aware that when you use the* [ENTER] *key to finalize your data entry in this function, the data in all remaining buffer locations within that channel are cleared.*

3-5.1.8 Signal Conditioner Print Status Setup.

The signal conditioner print status setup is available only on those recorders equipped with the Alphanumeric Printing option (AP-95). This setup is only applicable when the recorder is used in conjunction with signal conditioners and a signal-conditioner card cage.

The signal conditioner print status setup allows you to enable or prohibit printing of signal conditioner status data in the last 40 character spaces of each interchannel buffer. In the factory default condition, the printing of signal conditioner status information is disabled. Either accept the factory defaults or enable signal conditioner printing status by performing the steps below.

1. **Press the [F2] key.**

   The LED display reads <EDIT CH>.

2. **Press the [8] key.**

   The LED display reads <SIG COND>.

3. **Press the [ENTER] key.**

   The LED display reads <NNNNNNNN> *(the factory default) or as last set.* <N> *signifies no signal conditioner reporting for each channel.*

4. **Either accept the factory defaults or previous settings by pressing the [ENTER] key or activate the reporting status of each channel as described in step 5.**

5. **Press eight numeric keys from [1] through [8].**

   Each number key represents its corresponding recording channel. As each key is pressed, the reporting status of the channel switches between <N> *and* <Y>. *Press keys* [1] *through* [8] *until the reporting status of each channel reads as you desire.* <Y> *indicates YES, signal conditioner status will be recorded in the interchannel buffer.*

6. **Press the [ENTER] key.**

   The LED display reads <READY>. *The data have been accepted and you can proceed.*

3-5.1.9 Channel Order Setup. The channel order setup allows you to specify the playout order of the recorder's eight channels. This is a particularly helpful feature if you wish to perform comparisons between waveform data that are not in adjacent recording channels. With this setup, channel order can be changed quickly to any arrangement that you desire. Each channel is paired with an interchannel annotation buffer. The interchannel buffer moves with its associated channel whenever the channel order is changed.

The channel order established by the factory default setting is <12345678>. This means that, as viewed from the recorder's front, the left-most channel is channel 1 with the remaining channels progressively numbered from 2 through 8 across the chart.

Either accept the factory defaults or change the channel order setup as described below.

1. **Press the [F1] key.**

   The LED display reads <CH. ORDER>.

2. **Press the [ENTER] key.**

   The display reads either the factory default, <12345678>, *or as last set.*

3. **Press numeric keys [1] through [8] in the channel order you desire.**

   The first number entered appears on the right side of the display and moves left as additional numbers are entered. The number in the left-most position of the display corresponds to the channel printed in the left-most position on the chart paper. Each succeeding number represents an adjoining channel progressing to the right-most channel of the chart.

4. **Press the [ENTER] key.**

   The display reads <READY>. *The channel order you entered has been accepted and you can proceed.*

3-5.1.10 Grid Printing On/Off Setup. The grid printing on/off setup allows you to specify whether or not a grid will be printed with the recorder's waveform output. The factory default sets the grid-printing setup to <GRID ON>.

Either accept the factory default or change the grid printing setup as described below.

1. **Press the [F1] key.**

   The LED display reads <CH. ORDER>.

2. **Press the [1] key.**

   The LED display reads <GRID>.

3. **Press the [ENTER] key.**

   The LED display reads either the factory default, <GRID ON>, *or* <GRID OFF>.

4. **Press either the [A] or [C] keys.**

   The display will switch between <GRID ON> *and* <GRID OFF> *as either key is pressed. Press either key until the LED display reads as you desire.*

5. **Press the [ENTER] key.**

The LED display reads <READY>. *The choice you selected has been accepted and you can proceed.*

3-5.1.11 Signal Polarity Reverse Setup. The MT-9500 inputs are preset to the industry standard polarity:

Positive signals move toward the left edge of the grid

Negative signals move toward the right edge of the grid

However, as a result of the inconsistencies of certain transducers or for purposes of comparison, it can be useful to reverse standard polarity. The signal polarity reverse setup allows you to specify the polarity of each channel without rewiring signal input connections. The factory default for this setup is <NNNNNNNN>. This indicates that the polarity of of each channel is non-inverted, <N>. The polarity of each channel can be inverted, <I>, by using the procedure given below.

Either accept the factory default or change the signal polarity setup for each channel as described below.

1. **Press the [F1] key.**

The LED display reads <CH. ORDER>.

2. **Press the [7] key.**

The display reads <INVERT>.

3. **Press the [ENTER] key.**

The display reads either the factory default, <NNNNNNNN>, *or as last set.*

4. **Press any numeric keys from [1] through [8] corresponding to the channel(s) whose signal polarity you want to change.**

As each key is pressed, its corresponding indicator on the LED display will switch between <N> *(noninverted) and* <I> *(inverted). Press each numeric key until each channel reads* <N> *or* <I> *according to your preference.*

5. **Press the [ENTER] key.**

   The display reads <READY>. *The signal inversion set-ups you entered were accepted and you can proceed.*

3-5.1.12 Real-Time Motor Speed Source Setup. *The Remote Drive option, RD-95, is required for this function.* Data recorded by the MT-9500 are printed at a rate referenced to the recorder's internal clock. The recorder's stepper motor advances the chart paper in relation to time. You may wish to reference stepper motor speed to a factor other than time, for example, distance. The real-time motor speed source setup allows you to control the speed of the stepper motor by means of a pulse train that you supply rather than the recorder's internal clock. In other words, this setup allows you to control the speed of the stepper motor clock through an external speed source. (Consult the MT-9500/MT8800 Host-Control Operations Manual for a description of how this is accomplished using a host computer.) Connection of your TTL pulse train signal to the MT-9500 is made through pin 15 of the recorder's rear-panel UTILITY PORT receptacle. The pulse rate of the input signal must be between 0 - 800 Hz. A handy formula for deriving chart speed when using this setup is:

Speed = frequency / 16 For example, 800 / 16 = 50 mm/s

NOTE

When the recorder is set for external stepper-motor speed control, the MT-9500 will print and advance the chart paper only in relation to the pulse train you supply. If no pulse is present, the recorder will not print and will not advance the chart paper.

Follow the procedure presented below to implement the real-time motor speed source setup.

1. **Press the [F2] key.**

   The LED display reads <EDIT CH>.

2. **Press the [7] key.**

   The display reads < MCLK SRC>. *This means that you are about to select a stepper motor clock source.*

3. **Press the [ENTER] key.**

   The display will read either <EXTERNAL> *or* <INTERNAL> *depending upon on how it was last set.* <EXTERNAL> *references the stepper motor to your input pulse train.* <INTERNAL> *references the stepper motor to the recorder's internal clock.*

4. **Press either the [A] key or the [C] key.**

   The display will switch between the <EXTERNAL> *and* <INTERNAL> *displays. Stop when the LED display shows the setting that you desire.*

5. **Press the [ENTER] key.**

   The displays reads <READY>. *The motor speed source option that you selected has been entered. You can proceed.*

3-5.1.13 Set Communications Type Setup. The set communications type setup allows you specify whether the recorder will be operated:

- under local control through the MT-9500 front-panel keypad or
- under host control by connecting the MT-9500 to a host computer using the recorder's rear panel's SERIAL PORT receptacle or UTILITY PORT receptacle.

Follow the procedure below to implement the set communications type setup.

1. **Press the [F2] key.**

   The display reads <EDIT CH>.

2. **Press the [6] key.**

   The display reads <SET COMM>.

3. **Press the [ENTER] key.**

   The display will read <KEYPAD> *or as last set.*

4. **Press either the [A] key or [C] key to scroll through the three available communications settings: <KEYPAD>, <RS232>, and <GPIB>.**

   The display will show each of the communications settings as the key is pressed. Stop when the display shows the setting of your choice.

5. **Press the [ENTER] key.**

   If you chose the <KEYPAD> *setting, the display will briefly show the word* <WAIT> *and will then read* <READY>. *The recorder has been placed into local (keypad) control. You can proceed.*

   If you chose the <RS232> *setting, the display will read* <BR 300> *or as last set. You must now scroll through the four baud rate (BR) settings and select the baud rate of your choice.*

   - **Press either the [A] key or the [C] key to view the available settings.**

     As either key is pressed, the display will show the following settings: <BR 300>, <BR 1200>, <BR 9600>, <BR 19200>.

   - **Stop at the baud rate setting of your choice and press the [ENTER] key. The display reads <RS232 .>.**

     Note that the display contains a blinking red dot indicating that the recorder has been placed under host computer control and is awaiting RS232 communications.

   - **Consult your MT-9500/MT8800 Host-Control Operations Manual for further host-control operational instructions.**

If you chose the <GPIB> *setting, the display will read* <GPIB 05> *or as last set. This indicates the current GPIB address.*

- **Change the GPIB address by pushing any two numeric keys of your choice. Valid addresses are between 00 and 30.**

  The display will change to show the numbers you entered.

- **When you have selected a GPIB address, press the [ENTER] key.**

  The display will read <GPIB XX.> *showing the numbers you entered and a blinking red dot. This indicates that the recorder has been placed under host computer control and is awaiting GPIB communications at the displayed address.*

- **Consult your MT-9500/MT8800 Host-Control Operations Manual for further host-control information.**

Use the procedure below to return the recorder to local control from either of the host control communications options.

1. **While the recorder is in either the <RS232 .> setting or the <GPIB XX.> setting, press the [F2] key.**

   The display reads <SET COMM>.

2. **Press the [ENTER] key.**

   The display will change to show the current host control communications setting.

3. **Press either the [A] key or the [C] key to display the three communications settings: <KEYPAD>, <RS232>, and <GPIB>. Stop when the display reads <KEYPAD>.**

4. **Press the [ENTER] key.**

   The display will briefly read <WAIT> *and will then read* <READY>. *The recorder has been returned to local (front-panel keypad) control. You can proceed.*

3-5.1.14 Set Factory Defaults Setup. The set factory defaults setup is used to return the existing values of all function command settings to their respective factory default values. Use the procedure given below to implement this setup.

1. **Press the [F2] key.**

   The LED display reads <EDIT CH>.

2. **Press the [2] key.**

   The display reads <DEFAULTS>.

3. **Press the [ENTER] key.**

   The display will read either <FULL> *or* <PARTIAL> *depending on how the recorder was last set.*

4. **Press either the [A] key or the [C] key to switch between the two settings. When the display reads as you desire, press the [ENTER] key.**

   - *If you selected the* <FULL> *defaults option and pressed* [ENTER], *the display will read* <READY>. *Full factory default setup values have been implemented and you can proceed.*

   - *If you selected the* <PARTIAL> *defaults option and pressed* [ENTER], *the display will read* <READY>. *All factory default setup values have been implement except that no interchannel buffer data are affected.*

3-5.1.15 Define Snapshot Sample Rate Clock Source Setup. *The Data Capture option (DC-95) is required for this function.* Just as the speed of the stepper motor can be controlled from an external source (3-5.1.11), the sample rate at which data are obtained during data capture acquisitions can be externally controlled. Rather than use the the acquisition setup (3-6.1.1), you may wish to impose an externally regulated sample rate. The snapshot sample rate clock source setup allows you to input a TTL pulse train from an external source to establish the sample rate of snapshot data acquisitions. Connection of your TTL pulse train signal to the MT-9500 is made through pin 15 of the recorder's rear-panel UTILITY PORT receptacle. The pulse rate of the input signal must be between 0 - 8 kHz.

Follow the procedure presented below to implement this setup.

1. **Press the [F] key.**

   The LED display reads <EDIT CH>.

2. **Press the [7] key.**

   The display reads < SAMP CLK>. *This means that you are about to select a sample rate clock source.*

3. **Press the [ENTER] key.**

   The display will read either <EXTERNAL> *or* <INTERNAL> *depending upon on how it was last set.* <EXTERNAL> *references the sample rate to your input pulse train.* <INTERNAL> *references the sample rate to the recorder's internal clock.*

4. **Press either the [A] key or the [C] key.**

   The display will switch between the <EXTERNAL> and <INTERNAL> displays. Stop when the LED display shows the setting that you desire.

5. **Press the [ENTER] key.**

   If you selected <EXTERNAL>, *the recorder waits in a ready state and, when a data acquisition occurs, samples data at a rate established by your pulse train. If no pulse train is present, data will not be sampled. If you selected* <INTERNAL>, *the sample rate will be in accordance with the settings of the acqisition setup (3-6.1.1). In either case, after the* [ENTER] *key has been pressed, the LED display reads* <READY> *and you can proceed.*

3-1.5.16 Setup Summary. Each of the setups described in paragraphs 3-5.1.1 through 3-5.1.14 has its own influence on the real-time recording of the MT-9500. Each real-time setup is defined either by the factory defaults or by incorporating the settings of your choice. When the setups have been established, the recorder is ready to be placed into any of its operational modes.

The paragraphs that follow discuss each of the following real-time operational modes:

Eight-channel recorder operation

Overlap recorder operation

Dual-speed recorder operation

Datalogger recorder operation

3-5.2 Eight-Channel Real-Time Recording: Mode 0

The eight-channel real-time recording mode enables the recorder to print a maximum of eight simultaneous 40 mm-wide channels of real-time analog waveform data. Figure 3-7 is an example of eigh-channel real-time recording.

This mode is perhaps the most basic use of the recorder. As with all real-time modes, you should first define each of the setups already discussed above. You should, for instance, decide what chart paper speed you want, whether or not you want a grid, what will be printed in the interchannel buffers, what order the channels will be printed in, etc.

To make the importance of establishing your operational setups very clear, generic setups will be presented when each mode is discussed. They emphasize the point that the content and appearance of your charts always reflect your setup choices.

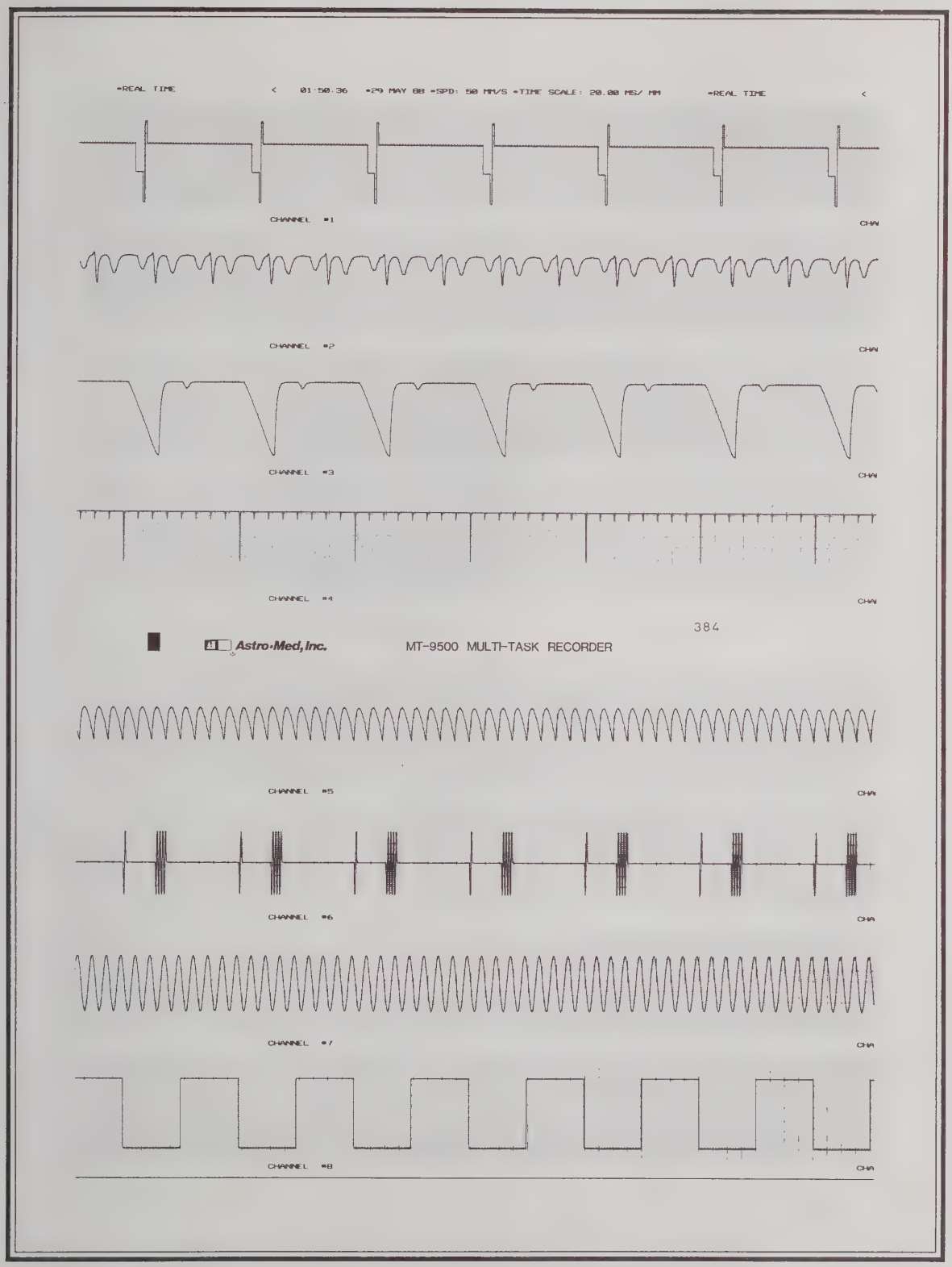

Figure 3-7. Sample Chart: Eight Channel Real-Time Recording

Establish Your Setups

Time	[TIME] [HH MM] [ENTER]
Date	[DATE] [MM DD YY] [ENTER]
Chart speed	[MM/SEC, MM/MIN, MM/HR] [XXX] [ENTER]
Insta-speeds	[ABC] [A, B, or C] [XXX] [ENTER]
Timed operation	[F2] [3] [ENTER]
Event or Annotation	[F1] [2] [ENTER]
Annotation entry	[F2] [0] [ENTER]
Signal Conditioner Print Status	[F2] [8] [ENTER]
Grid printing on/off	[F1] [1] [ENTER]
Channel order	[F1] [0] [ENTER]
Signal polarity reverse	[F1] [7] [ENTER]
Motor Speed Source*	[F2] [7] [ENTER]
Local or Host Control	[F2] [6] [ENTER]
Factory Defaults	[F2] [2] [ENTER]
Sample Rate Clock**	[F2] [5] [ENTER]

*RD-95 option required.
**DC-95 option required.

Remember that setups can be accessed and changed at any time during 8-channel real-time operation.

Enter the Mode

1. **Press the [MODE] key.**

   The LED display reads <8 CH RT> *indicating that you are about to access the eight-channel real-time recording mode.*

2. **Press the [ENTER] key.**

   The MT-9500 immediately begins real-time recording in each of its eight channels. The content of the channels and the interchannel buffers will reflect your setup choices.

3. **To halt recorder printing, press the [HALT] key.**

   The recorder stops printing but does not exit the eight-channel real-time recording mode.

4. **To resume recorder printing, press the [HALT] key again.**

   Pressing the [HALT] *key a second time causes the recorder to resume printing in the eight-channel real-time mode.*

5. **To exit the eight-channel real-time recorder mode:**

   - **Press the [HALT] key and then**
   - **Press the [ENTER] key**

   The LED display reads <READY>. *The recorder has exited the mode. You can proceed.*

Alternatives Within the Mode

You can use several operational alternatives within the 8-channel real-time mode to influence the recording of the MT-9500. The information below lists those alternatives. Use the list to remind yourself of the functional choices you have when operating within this mode.

- Alter any of the recorder's operational setups.
- Mark any data of interest to you by pressing the front-panel EVENT pushbutton.

  The recorder continuously prints a System Event Marker baseline on the right-most side of the chart paper as viewed from the front of the recorder. When the EVENT pushbutton is pressed, the event marker line deflects to the left where it remains until the pushbutton is released. When released, the event marker line returns to its right-most position.

- Identify each waveform by channel number by pressing the front-panel ID pushbutton.

  When the recorder is operating in the overlap mode, pressing the ID pushbutton causes the real-time waveforms within each recorder channel to be labeled with the appropriate channel numbers.

  When the recorder is operating in the 8-channel real-time mode, pressing the ID pushbutton causes the appropriate channel number to be printed in the center of each channel.

- Initiate a manual trigger by pressing the front-panel TRIG pushbutton.

  Your recorder must be equipped with the Data Capture option, DC-95, to have this capability. A manual trigger results in an on-demand, "start-trigger" data capture/playback. This means that the only data captured are data received after the trigger. No pre-trigger data are captured.

- Receive a data-capture playback resulting from a trigger that you have predefined.

  Your recorder must be equipped with the Data Capture option, DC-95, to have this capability. When a trigger is detected in any input signal, data will be captured and played back as set by the trigger definition group (paragraph 3-2.5).

  This is <u>not</u> a real-time recorder action. When a predefined trigger is detected, the recorder will temporarily cease 8-channel real-time recording. The recorder will then enter the Data Capture and Playback mode to display the captured information. When the information has been replayed, the recorder will automatically return to 8-channel real-time operation.

- Use the controls of the signal adjustment group (paragraph 3-2.2) to:

  - Position the real-time trace within the the channel.

  - Set the calibration for the real-time waveform trace.

- With the CAL/UNCAL/GND switch set to CAL, vary the gain applied to the signal on the trace to reduce the appearance of the real-time trace.

- Use the recorder's rear-panel connectors to:

  - Turn the recorder on or off from an external source through the RUN BNC connector. The on or off action can be initiated either by a switch closure or a TTL low.

  - Mark a system event through an external source through the EVENT BNC connector.

  - Initiate a trigger from an external source through the TRIG BNC connector. The trigger can result from a switch closure or TTL Low when the front-panel trigger slope is set to EXT (external).

- Change recorder operation from current mode to any other mode resident in the recorder.

3-5.3 Overlap Real-Time Recording: Mode 1

The overlap real-time recording mode enables you to record two groups of overlapped analog waveforms. Each group consists of four overlapped waveforms on a 160 mm-wide grid. You can use the channel order setup (3-5.1.9) to choose the specific channels you wish to be printed in each of the two overlap grids and to suppress the printing of channels you may not want.

This mode is particularly useful for waveform comparisons. Differences between waveforms may become more apparent when the waveforms are overlaid. Figure 3-8 is an example of overlap real-time recording. To use the overlap real-time recording mode, follow the procedures given below.

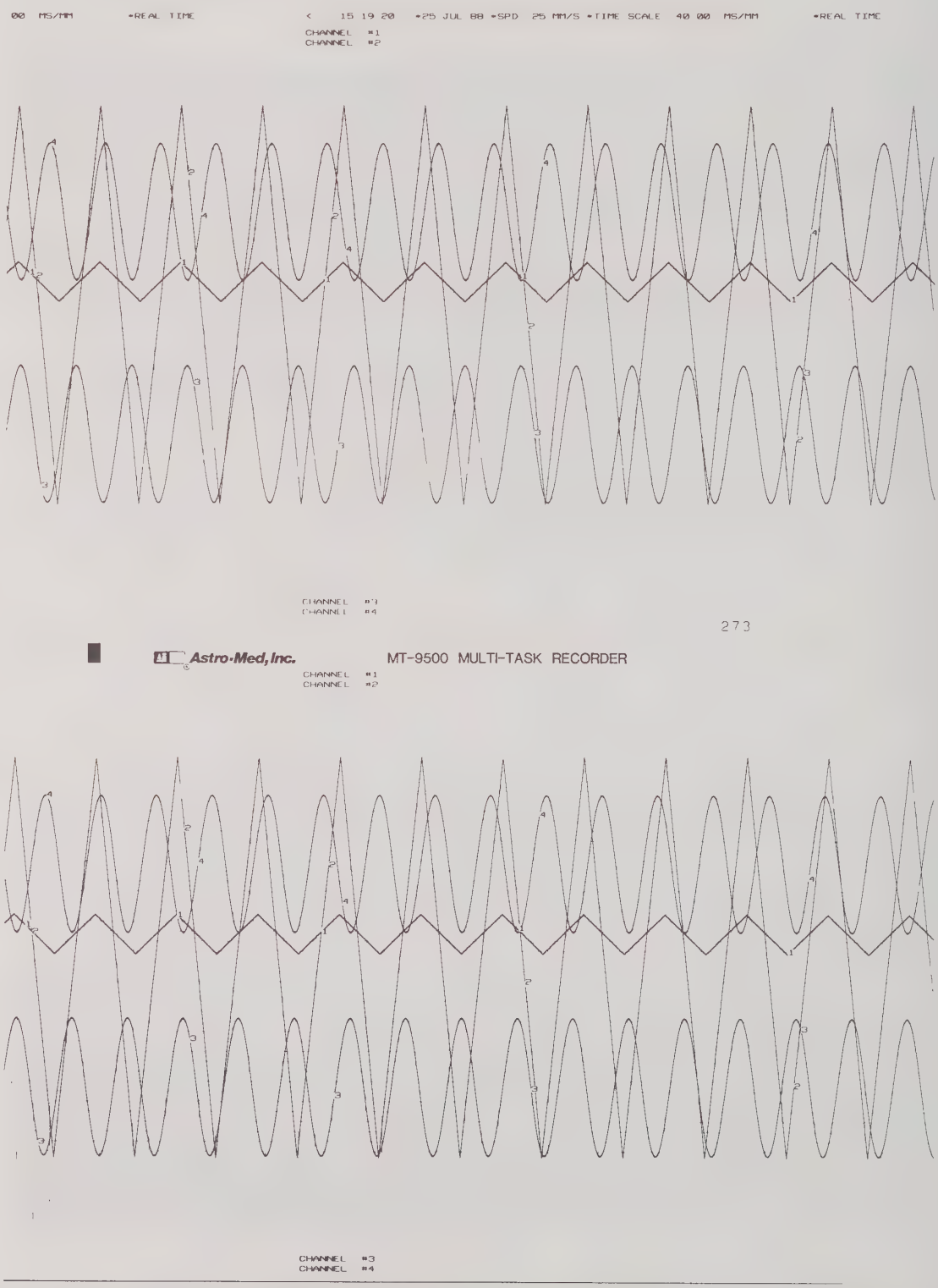
00 MS/MM *REAL TIME
< 15 19 20 *25 JUL 88 *SPD 25 MM/S *TIME SCALE 40 00 MS/MM *REAL TIME
CHANNEL #1
CHANNEL #2
CHANNEL #3
CHANNEL #4
273
Astro-Med, Inc.
MT-9500 MULTI-TASK RECORDER
CHANNEL #1
CHANNEL #2
CHANNEL #3
CHANNEL #4

Establish Your Setups

Time	[TIME] [HH MM] [ENTER]
Date	[DATE] [MM DD YY] [ENTER]
Chart speed	[MM/SEC, MM/MIN, MM/HR] [XXX] [ENTER]
Insta-speeds	[ABC] [A, B, or C] [XXX] [ENTER]
Timed operation	[F2] [3] [ENTER]
Event or Annotation	[F1] [2] [ENTER]
Annotation entry	[F2] [0] [ENTER]
Signal Conditioner Print Status	[F2] [8] [ENTER]
Grid printing on/off	[F1] [1] [ENTER]
Channel order	[F1] [0] [ENTER]
Signal polarity reverse	[F1] [7] [ENTER]
Motor Speed Source*	[F2] [7] [ENTER]
Local or Host Control	[F2] [6] [ENTER]
Factory Defaults	[F2] [2] [ENTER]
Sample Rate Clock**	[F2] [5] [ENTER]

*RD-95 option required.
**DC-95 option required.

Remember that setups can be accessed and changed at any time during real-time operation.

Enter the Mode

1. **Press the [MODE] key.**

   The LED display reads <8 CH RT>.

2. **Press the [1] key.**

   The display reads <OVLAP RT> *indicating that you are about to access the overlap real-time recording mode.*

3. **Press the [ENTER] key.**

   The recorder immediately begins overlap real-time recording. Two identical grids are created and four waveforms are overlapped within each grid. Two interchannel buffers are printed to the left and right of each grid. The LED displays the current time.

4. **To halt recorder printing, press the [HALT] key.**

   The recorder stops printing but does not exit the overlap real-time recording mode.

5. **To resume recorder printing, press the [HALT] key again.**

   Pressing the [HALT] *key a second time causes the recorder to resume printing in the overlap real-time recording mode.*

6. **To exit the overlap real-time recorder mode:**

   - **Press the [HALT] key and then**
   - **Press the [ENTER] key**

     The LED display reads <READY>. *The recorder has exited the mode. You can proceed.*

Alternatives Within the Mode

You can use several operational alternatives within the overlap real-time mode to influence the recording of the MT-9500. The information below lists those alternatives. Use the list to remind yourself of the functional choices you have when operating within this mode.

- Alter any of the recorder's operational setups.
- Mark any data of interest to you by pressing the front-panel EVENT pushbutton.

  The recorder continuously prints a System Event Marker on the right-most side of the chart paper as viewed from the front of the recorder. When the EVENT pushbutton is pressed, the event marker line deflects to the left where it remains until the pushbutton is released. When released, the event marker line returns to its right-most position.

- Identify each waveform by channel number by pressing the front-panel ID pushbutton.

  When the recorder is operating in the overlap mode, pressing the ID pushbutton causes the real-time waveforms within each recorder channel to be labeled with the appropriate channel numbers.

  When the recorder is operating in the 8-channel real-time mode, pressing the ID pushbutton causes the appropriate channel number to be printed in the center of each channel.

- Initiate a manual trigger by pressing the front-panel TRIG pushbutton.

  Your recorder must be equipped with the Data Capture option, DC-95, to have this capability. A manual trigger results in an on-demand, "start-trigger" data capture/playback. This means that the only data captured are data received after the trigger. No pre-trigger data are captured.

- Recieve a data-capture playback resulting from a trigger that you have predefined.

  Your recorder must be equipped with the Data Capture option, DC-95, to have this capability. When a trigger is detected in any input signal, data will be captured and played back as set by the trigger definition group (paragraph 3-2.5).

  This is <u>not</u> a real-time recorder action. When a predefined trigger is detected, the recorder will temporarily cease 8-channel real-time recording. The recorder will then enter the Data Capture and Playback mode to display the captured information. When the information has been replayed, the recorder will automatically return to 8-channel real-time operation.

- Use the controls of the signal adjustment group (paragraph 3-2.2) to:

  - Position the real-time trace within the the channel.

  - Set the calibration for the real-time waveform trace.

- With the CAL/UNCAL/GND switch set to CAL, vary the gain applied to the signal on the trace to reduce the appearance of the real-time trace.

- Use the recorder's rear-panel connectors to:

  - Turn the recorder on or off from an external source through the RUN BNC connector. The on or off action can be initiated either by a switch closure or a TTL Low.

  - Mark a system event through an external source through the EVENT BNC connector.

  - Initiate a trigger from an external source through the TRIG BNC connector. The trigger can result from a switch closure or TTL Low when the front-panel trigger slope is set to EXT (external).

- Change recorder operation from current mode to any other mode resident in the recorder.

3-5.4 Dual Speed Real-Time Recording: Mode 4

The dual speed real-time recording mode of the MT-9500 provides two methods to toggle automatically between two preset chart speeds: *timed dual-speed recording* and *triggered dual-speed recording*.

No triggers are involved in placing the recorder into timed dual-speed recording. However, as the name implies, triggers are used to actuate triggered dual-speed recording.

When the operating parameters of either of the dual-speed mode alternatives have been set, the recorder will perform its dual-speed functions automatically. Except to halt or stop recorder operation, no operator intervention is necessary.

Timed dual-speed recording causes the instrument to toggle continuously between two preset chart speeds that you define. The recorder will operate at each speed for the specific period of time that you define. Therefore, in timed dual-speed operation, you must:

- set the speeds you want the recorder to toggle between (speed 1 and speed 2)

- set the length of time you want the recorder to remain at each speed before toggling to the other (time 1 and time 2)

When placed into timed dual-speed operation, the recorder will toggle immediately and continuously between the two user-defined speeds at the time intervals that you specify.

When a trigger is detected, triggered dual-speed recording causes the instrument to switch between an initial speed that you define and an alternate speed that you define.

NOTE

Use the front-panel controls of the trigger definition group (paragraph 3-2.5) to define the trigger that will initiate triggered dual-speed recording.

In triggered dual-speed recording, you must:

- set the base chart-paper speed (speed 1) at which the recorder will operate in the absence of triggers

  Notice that no time length is defined for speed 1. The recorder will operate at speed 1 indefinitely until a trigger is sensed.

- set the timed dual-speed/triggered dual-speed alternative to TRIGGER on the LED display

- set the alternate chart-paper speed (speed 2) at which the recorder will operate when a trigger is detected

- set the length of time after a trigger has been detected that the recorder will remain at speed 2 before it toggles back to the base chart-paper speed (speed 1)

Use the procedure given below to place the recorder into either timed dual-speed operation or triggered dual-speed operation.

Establish Your Setups

Time	[TIME] [HH MM] [ENTER]
Date	[DATE] [MM DD YY] [ENTER]
Chart speed	[MM/SEC, MM/MIN, MM/HR] [XXX] [ENTER]
Insta-speeds	[ABC] [A, B, or C] [XXX] [ENTER]
Timed operation	[F2] [3] [ENTER]
Event or Annotation	[F1] [2] [ENTER]
Annotation entry	[F2] [0] [ENTER]
Signal Conditioner Print Status	[F2] [8] [ENTER]
Grid printing on/off	[F1] [1] [ENTER]
Channel order	[F1] [0] [ENTER]
Signal polarity reverse	[F1] [7] [ENTER]
Motor Speed Source*	[F2] [7] [ENTER]
Local or Host Control	[F2] [6] [ENTER]
Factory Defaults	[F2] [2] [ENTER]
Sample Rate Clock**	[F2] [5] [ENTER]

*RD-95 option required.
**DC-95 option required.

Remember that setups can be accessed and changed at any time during real-time operation.

Enter the Mode

1. **Press the [MODE] key.**

   The LED display will read <8 CH RT>.

2. **Press the [4] key.**

   The display will read <DUAL SPD>.

3. **Press the [ENTER] key.**

The display will read either <8-CHNLS> *or* <OVERLAP> *depending on how last set.* <8-CHNLS> *indicates that recorder output will be in 8 individual channels.* <OVERLAP> *indicates that recorder output will be two individual expanded grids each containing four overlapped waveforms.*

4. **Press either the [A] key or the [C] key.**

As the keys are pressed, the display will switch between <8-CHNLS> *and* <OVERLAP>. *Press either key until the display reads the format you desire.*

5. **Press the [ENTER] key.**

The LED display will read <S1 025/S> *(the factory default) or the chart-paper speed last set.* <S1 025/S> *indicates that speed 1 is set for 25 mm per second.*

6. **Either accept the displayed speed by pressing the [ENTER] key or change the speed by pressing any three numeric keys from [0] through [9] to specify the chart speed you desire.**

The LED display will change to reflect the digits entered.

7. **Press either the [MM/SEC], [MM/MIN], or [MM/HR] real-time setup keys to indicate the speed at which you want the chart paper to run.**

The display will change to reflect the time rate that you enter.

8. **Press the [ENTER] key.**

The display will read either <T1 00.00> *(or as last set) or* <TRIGGER>.

<T1 00.00> *is the factory default for time 1. It indicates the amount of time the recorder will run at speed 1 before automatically toggling to speed 2. The factory default time 1 setting disables timed dual-speed operation.*

<TRIGGER> *indicates that the dual speed mode is set for triggered dual-speed recording.*

NOTE

You are now ready to chose between timed dual-speed recording and triggered dual-speed recording. Follow the steps below to initiate the alternative you desire and to input the set-up data your choice requires.

- Follow steps 10 through 19 under "If You Have Chosen Timed Dual-Speed Recording" to initiate timed dual-speed operation.
- Follow steps 10 through 18 under "If You Have Chosen Triggered Dual Speed Recording" to initiate triggered dual-speed operation.

The steps are clear-cut but follow them carefully to avoid confusion between the alternatives.

9. Press either the [A] or [C] keys.

The display will switch between the factory-default time 1 (or the last-set time) and the word <TRIGGER>. *Press either key until the LED display indicates the dual-speed alternative that you desire.*

If You Have Chosen Timed Dual-Speed Recording

10. The display reads <T1 00.00> or as last set. Press any four numeric keys from [0] through [9] to set the time period for which the recorder will operate at speed 1 before toggling to speed 2.

The LED display will change to reflect the digits entered.

11. Press the [ENTER] key.

The LED display will read <S2 050/S> *(the factory default) or the chart-paper speed last set.* <S2 050/S> *indicates that speed 2 is set for 50 mm per second.*

12. **Either accept the displayed speed by pressing the [ENTER] key or change the time by pressing any three numeric keys from [0] through [9] to specify the speed you desire.**

    The LED display will change to reflect the digits entered.

13. **Press either the [MM/SEC], [MM/MIN], or [MM/HR] real-time setup keys to indicate the speed at which you want the chart paper to run.**

    The display will change to reflect the speed that you enter.

14. **Press the [ENTER] key.**

    The display reads <T2 00.00> *or as last set.*

15. **Press any four numeric keys from [0] through [9] to set the time period for which the recorder will operate at speed 2 before toggling back to speed 1.**

    The LED display will change to reflect the digits entered.

16. **Press the [ENTER] key.**

    The recorder will immediately enter timed dual-speed recording. The recorder will toggle continuously between the chart-paper speeds that you have specified. Toggling will occur at the time intervals you have established. The LED display will be dynamic and will show the durations of time 1 and time 2 in "countdown" fashion. The changing LED display will show you the amount of time remaining to the next toggle action.

17. **To halt the recorder, press the [HALT] key.**

    The recorder will stop recording but remain in the dual speed mode. The dynamic countdown shown on the LED display will stop and remain unchanged.

18. **To resume recording, press the [HALT] key again.**

    The recorder immediately resumes recording and reinitiates the remainder of the countdown to the next toggle action.

19. To exit the dual speed mode, press the [ENTER] key.

The LED display reads <READY>. *You can proceed.*

If You Have Chosen Triggered Dual Speed Recording

> **NOTE**
>
> Use the front-panel SLOPE and LEVEL controls of the trigger definition group (3-2.5) to specify the trigger conditions you desire.

10. The LED display reads <TRIGGER>. Press the [ENTER] key.

The display reads the factory default <S2 050/S> *or as last set. This means that the default value sets speed 2 of the dual-speed mode to 50 mm/s. Speed 2 is the speed to which the recorder will toggle when a trigger is detected.*

11. Either accept the displayed speed by pressing [ENTER] or press any three numeric keys from [0] through [9] to specify the speed you desire.

The LED display will change to reflect the digits entered.

12. Press either the [MM/SEC], [MM/MIN], or [MM/HR] real-time setup keys to indicate the speed at which you want the chart paper to run.

The display will change to reflect the speed that you enter.

13. Press the [ENTER] key.

The display reads the factory default, <T2 00.00>, *or as last set.*

14. Press any four numeric keys from [0] through [9] to set the amount of time the recorder will run at speed 2 (step 11) before toggling back to speed 1.

15. **Press the [ENTER] key.**

The display reads <TRIGGER> *and the recorder immediately begins to run at speed 1.*

The recorder will remain in operation at speed 1 until a trigger is detected. When a trigger is detected, the recorder will toggle to speed 2 for the duration of time 2.

When a trigger has caused the recorder to toggle to speed 2, the LED display will dynamically show the duration of time in "countdown" fashion. The countdown shows the time elapsing until the recorder returns to operation at speed 1 to await another tigger.

16. **To halt the recorder, press the [HALT] key.**

The recorder stops. The fact that recorder has been halted is indicated by the presence of a period in the LED display: <TRIGGER . >. *You can halt recorder operation at any time.*

17. **To resume recorder operation, press the [HALT] key again.**

The recorder immediately returns to operation at the point at which it was halted. If halted while awaiting a trigger, the recorder returns to operation at speed 1. If halted after having been toggled to speed 2, the recorder will resume the time-2 countdown, conclude the countdown, and toggle to operation at speed 1.

18. **To exit the dual speed mode:**

- **Press the [HALT] key and then**
- **Press the [ENTER] key**

The LED displays <READY>. *You can proceed.*

Alternatives Within the Mode

You can use several operational alternatives within the dual speed real-time mode to influence the operation of the MT-9500. The information below lists those alternatives. Use the list to remind yourself of the functional choices you have when operating within this mode.

- Alter any of the recorder's operational setups.

- Mark any data of interest to you by pressing the front-panel EVENT pushbutton.

  The recorder continuously prints a System Event Marker baselines on the right-most side of the chart paper as viewed from the front of the recorder. When the EVENT pushbutton is pressed, the event marker line deflects to the left where it remains until the pushbutton is released. When released, the event marker line returns to its right-most position.

- Identify each waveform by channel number by pressing the front-panel ID pushbutton.

  When the recorder is operating in the overlap mode, pressing the ID pushbutton causes the real-time waveforms within each recorder channel to be labeled with the appropriate channel numbers.

  When the recorder is operating in the 8-channel real-time mode, pressing the ID pushbutton causes the appropriate channel number to be printed in the center of each channel.

- Initiate a manual trigger by pressing the front-panel TRIG pushbutton.

  Your recorder must be equipped with the Data Capture option, DC-95, to have this capability. A manual trigger results in an on-demand, "start-trigger" data capture/playback. This means that the only data captured are data received after the trigger. No pre-trigger data are captured.

- Receive a data-capture playback resulting from a trigger that you have predefined.

  Your recorder must be equipped with the Data Capture option, DC-95, to have this capability. When a trigger is detected in any input signal, data will be captured and played back as set by the trigger definition group (paragraph 3-2.5).

  This is not a real-time recorder action. When a predefined trigger is detected, the recorder will temporarily cease 8-channel real-time recording.The recorder will then enter the Data Capture and Playback mode to display the captured information. When the information has been displayed, the recorder will automatically return to 8-channel real-time operation.

- Use the controls of the signal adjustment group (paragraph 3-2.2) to:

  - Position the real-time trace within the channel.

  - Set the calibration for the real-time waveform trace.

  - With the CAL/UNCAL/GND switch set to CAL, vary the gain applied to the signal on the trace to reduce the appearance of the real-time trace.

- Use the recorder's rear-panel connectors to:

  - Turn the recorder on or off from an external source through the RUN BNC connector. The on or off action can be initiated either by a switch closure or a TTL Low.

  - Mark a system event through an external source through the EVENT BNC connector.

  - Initiate a trigger from an external source through the TRIG BNC connector. The trigger can result from a switch closure or TTL Low when the front-panel trigger slope is set to EXT (external).

- Change recorder operation from current mode to any other mode resident in the recorder.

3-5.5 Datalogger Real-Time Recording: Mode 9

The Datalogger option (DL-95) is required to operate the recorder in Datalogger mode.

The datalogger real-time recording mode enables the recorder to convert analog waveforms into eight tabular columns of calibrated, numeric engineering units that you specify. Figure 3-9 is an example of datalogger recording.

With this option, you can switch recorder operation almost instantly between waveform presentation of your data and the equivalent numeric values of that data calibrated to your requirements. Positive numbers, negative numbers, and exponents can be used to express the selected conversion factors.

After you have entered the conversion factors you desire, they are backed-up in the recorder's nonvolatile random access memory (RAM). The recorder's Condensed Operations Manual feature ([MODE] [8] [ENTER]) lists the datalogger conversion factors and can be used as a handy reference to monitor current settings.

The Datalogger mode differs from all of the other modes because it presents data as numbers rather than as analog waveforms. Because of this, the Datalogger mode has a group of setups that differs from the modes already discussed. Only four setups apply to the Datalogger mode: time, date, channel order, and datalogger (cal log). The Datalogger (Cal Log) set-up is used only with the Datalogger mode and is separately discussed below.

Follow the procedure below to use the recorder's optional Datalogger mode. The data you enter will appear on the LED display.

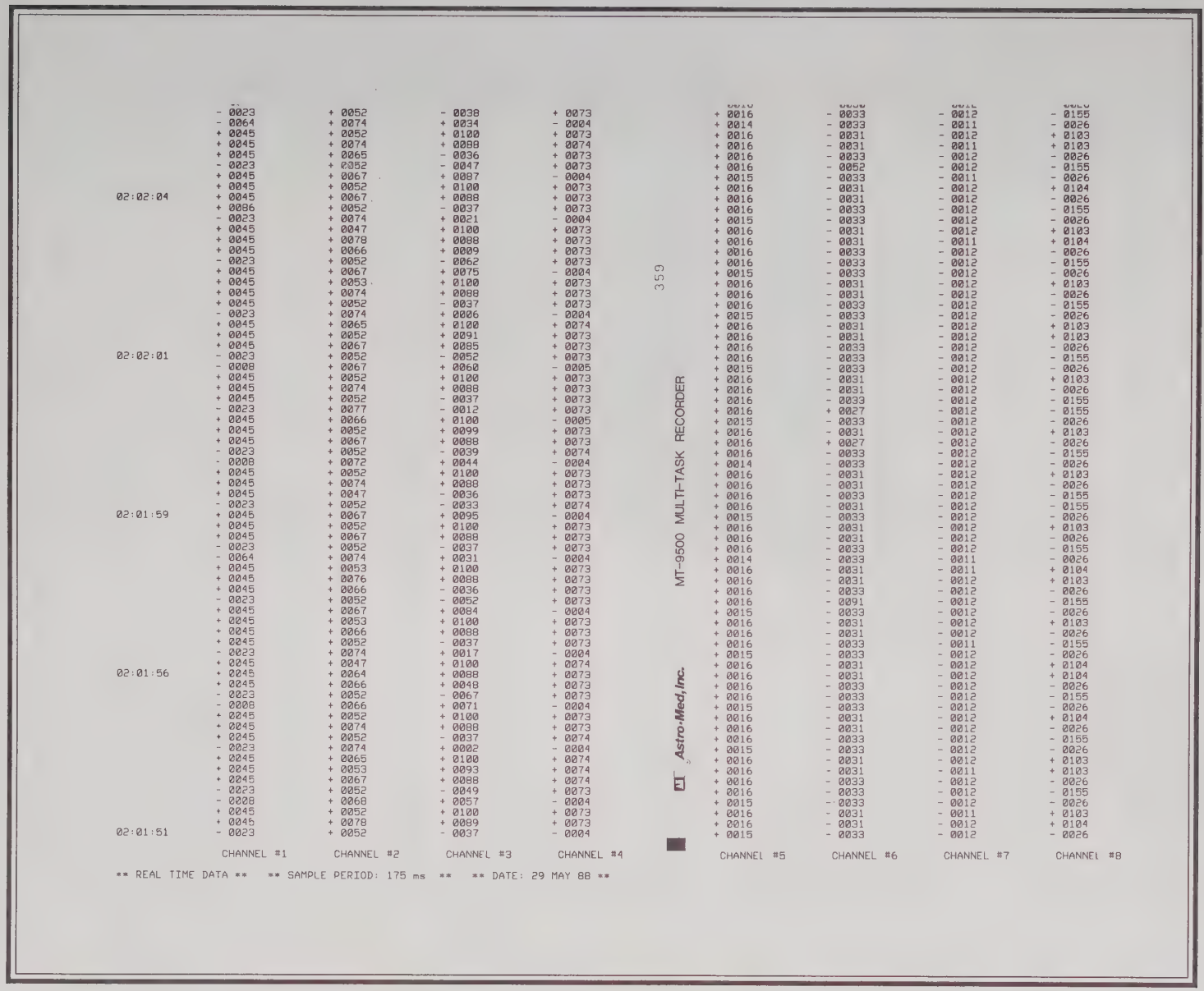

Figure 3-9. Sample Chart: Datalogger Recording

Establish Your Setups

Time*	[TIME] [HH MM] [ENTER]
Date*	[DATE] [MM DD YY] [ENTER]
Channel order	[F1] [0] [ENTER]

*If recording is configured for IRIG time codes, [TIME] and [DATE] will not function.

Remember that setups can be accessed and changed at any time during 8-channel real-time operation.

Define the Datalogger Setup

The Datalogger setup is used to set the left-side (LS) and right-side (RS) conversion factors of each recording channel. Follow the steps below to specify the desired left side and right side Datalogger values.

1. **Press the [F1] key.**

   The LED display reads <CH. ORDER>.

2. **Press the [8] key.**

   The LED display reads <CAL LOG>.

3. **Press the [ENTER] key.**

   The display reads <CHANNEL ?>.

4. **Press any single numeric key from [1] through [8] to specify the channel you want to access.**

   The display reads <CHANNELX> *where X is the channel you have chosen.*

5. **Press the [ENTER] key.**

   The display reads the factory default <LS= 0200> *or as last set. LS indicates the left side (limit) of the conversion range.*

6. **Either accept the displayed value by pressing the [ENTER] key or press any four numeric keys from [1] through [8] to specify the left side conversion limit. Use leading zeros as necessary.**

   The display will show the digits that you enter.

7. **Press either the [A] or [C] keys.**

   When either key is pressed, a mathematical negative sign (-) is added to or removed from the display. This allows you to specify whether the conversion factor that you entered will have positive or negative mathematical value. When the negative sign is not present in the display, a positive value is assumed and no mathematical sign is shown. Press the key until the display reads as you desire.

8. **Press the [ENTER] key.**

   The display will read the factory default <RS= - 0200> *or as last set. RS indicates the right side (limit) of the conversion range. Notice that the factory default for the right side has a negative value.*

9. **Either accept the displayed value by pressing the [ENTER] key or press any four numeric keys from [1] through [8] to specify the right side conversion limit. Use leading zeros as necessary.**

   The display will show the digits that you enter.

10. **Press either the [A] or [C] keys.**

    When either key is pressed, a mathematical negative sign (-) is added to or removed from the display. This allows you to specify whether the conversion factor that you entered will be of positive or negative mathematical value. When the negative sign is not present in the display, a positive value is assumed and no mathematical sign is shown. Press the key until the display reads as you desire.

11. **Press the [ENTER] key.**

    The display reads <EXP= 0> *or as last set. This indicates that the exponent applied to the conversion values.*

12. **Either accept the displayed exponent by pressing the [ENTER] key or press any single numeric key from [0] to [4] to select the exponential value you want applied to the data.**

    The digit in the display will change to show the number you entered.

13. **Press either the [A] or [C] keys.**

    When either key is pressed, a mathematical negative sign (-) is added to or removed from the display. This allows you to specify whether the chosen exponent will have positive or negative mathematical value. When the negative sign is not present in the display, a positive value is assumed.

14. **Press the [ENTER] key.**

    The display will read <CHANNEL ?>.

15. **Press any single numeric key from [1] through [8] to select another recording channel for which you want to define the Datalogger left-side/right-side calibration settings.**

16. **Repeat steps 4 through 13 above for each channel of interest to specify its Datalogger left-side/right-side calibration settings.**

17. **When you have established the Cal Log settings of your choice for each recording channel, exit the Cal Log setup by pressing the [HALT] key.**

    The display reads <READY>. *You are now ready to enter the Datalogger mode.*

<u>Enter the Mode</u>

1. **Press the [MODE] key.**

   The LED display reads <8 CH RT>.

2. **Press the [9] key.**

   The display reads <DATA LOG>.

3. **Press the [ENTER] key.**

   The MT-9500 immediately begins recording eight channels of numeric data. The LED display shows the current time in 24-hour format.

NOTE

"Sample period" refers to the Datalogger parameter that specifies how frequently a waveform will be printed. Of course, this then determines the frequency response of the system.

The factory-set default for the sample period is 175 milliseconds. The sample period is the line printing speed. For example, a sample period of 175 ms indicates that a line of data is printed every 175 milliseconds (175 ms/line).

You can change the sample period any time after you have entered the Datalogger mode. Sample periods from 175 ms/line to 999 min/line are possible. Follow step 4 below to specify the sample period/line printing speed of your choice.

4. **If you desire, change the sample period/line printing speed as described below:**

   - **While the recorder is operating in or has been halted in the Datalogger mode, press either the [MM/SEC], [MM/MIN], or [MM/HR] keys.**

     The LED display will read the factory default <175 MS/L> or as last set.

   - **Press any three numeric keys from [0] through [9] to specify the speed you desire.**

     The display will change to show the digits you entered.

- **Press either the [A] or [C] keys to specify the time rate you desire.**

  The LED display will change as the key is pressed to <MS/L>, <S/L>, or <M/L> *giving you the option of choosing milliseconds / line, seconds / line, or minutes / line.*

- **Press the [ENTER] key.**

  The recorder almost instantly begins sampling and printing at the new rate. The LED display will show the current time in 24-hour format.

5. **Press the [HALT] key to stop recorder printing.**

   The display reads <HALTED> *and the recorder stops printing.*

6. **Press the [HALT] key again to resume printing.**

   The LED display shows the current time in 24-hour format and the recorder resumes printing.

7. **To exit the Datalogger mode:**

   - **Press the [HALT] key and then**
   - **Press the [ENTER] key**

   When you press the [HALT] *key, the recorder will cease printing and the LED display will read* <HALTED>. *When you press the* [ENTER] *key, the the display will read* <READY>. *You can proceed.*

The Datalogger Printout

In addition to the eight channels of tabulated data, the Datalogger printout contains a variety of useful alphanumeric information. For your benefit, this information is explained below.

Channel Tags: The bottom of each column of data is labeled with with the word CHANNEL and a number specifying the channel number, i.e., CHANNEL 1.

Real-Time Data: Beneath the channel tags and across the left side of the chart, a line is printed with the following information.

REAL TIME DATA This simply reminds you that the recorded data represents real-time information.

SAMPLE PERIOD: XXX xx This lists the current rate at which waveform data are being sampled and printed. XXX represents values from 175 through 999 and xx represents ms (milliseconds), s (seconds), or m (minutes).

DATE: dd mm yy This specifies the day, month, and year of the recording.

Time Increments: Time increments presenting the hour, minute, and second in the generic 24-hour format hh:mm:ss are printed opposite every 16th line of data on the far left side of the chart. This provides a convenient time-frame reference.

NOTES

If the recorder is halted during Datalogger recording, the time increment will be printed immediately after Datalogger operation is resumed.

Whenever Datalogger is halted and any operational parameter is changed, the **REAL-TIME DATA** header will be revised and reprinted immediately after Datalogger recording is resumed.

Alternatives Within the Mode

You can use the two operational alternatives listed below to influence the recording of the MT-9500 within the Datalogger real-time mode.

- Alter any of the recorder's operational setups.
- Change recorder operation from current mode to any other mode resident in the recorder.

3-6 Data Capture/Playback Operation

Your recorder must be equipped with the Data Capture option (DC-95) to operate in any of the data-capture/playback modes.

In addition to real-time operation, the MT-9500 offers exceptional performance as a data-capture and replay instrument. Four modes are available to you during data capture/playback operation of the recorder:

Acquire Single Snapshot	MODE 5
Playback Single Snapshot	MODE 6
Continuous Snapshot (Untriggered)	MODE 2
Continuous Snapshot (Triggered)	MODE 3

Before discussing the individual data capture/playback modes, it is necessary to discuss the recording setups that apply to the data capture/playback mode.

The real-time setups listed below are also applicable to the Data Capture mode. These setups have already been defined. Refer to the respective paragraphs of section 3-5 to refresh your memory regarding these real-time setups.

Event or Annotation Setup
Annotation Entry Setup
Grid Printing On/Off Setup
Channel Order Setup
Signal Polarity Reverse Setup

The setups detailed in the paragraphs below are unique to the Data Capture mode. These setups specify trigger data and acquisition/playback data. *Consequently, the setups should be established before you enter and use the Data Capture mode.*

3-6.1 Data-Capture Recording Setups

Table 3-6 lists the MT-9500's data-capture recording setups and their generic keying sequences. Each of the setups will be individually discussed below. Notice that these recording setups define:

- the circumstances under which data capture will occur
- the characteristics of the playback

Table 3-7 lists the factory default data capture setups. If you do not wish to key-in your own setups, the recorder will automatically use the factory default values.

3-6.1.1 Acquisition Setup. The acquisition setup is used to define three parameters that specify how data snapshots will be acquired and saved. These parameters are (1) the number of channels from which data will be acquired and replayed, (2) the time base of the playback, and (3) the number of kilosamples to be acquired in each channel.

Time base refers to the sample period per millimeter represented on the chart. Time base is equivalent to sample rate.

Window size is a term that refers to the number of kilosamples to be stored in memory per snapshot acquisition. For an eight-channel snapshot, 1 through 16 kilosamples per channel can be selected. For a two-channel snapshot, 1 through 64 kilosamples can be selected.

Either accept the factory defaults or define the acquisition setup using the procedure below.

1. **Press the [F1] key.**

   The LED display reads <CH. ORDER>.

2. **Press the [6] key.**

   The display reads <DEF SAVE>.

3. **Press the [ENTER] key.**

   The display reads <USE 8 CH> *or as last set.*

Table 3-6. Data-Capture Setups

Setup	Keying Sequence
Acquisition	[F1] [6] [ENTER]
Playback	[F1] [4] [ENTER]
Trigger Channel and Location	[F1] [3] [ENTER]
Trigger On/Off	[F2] [4] [ENTER]
X and Y Channel Select	[F1] [5] [ENTER]
Sample Rate Clock	[F2] [5] [ENTER]

Table 3-7. Factory Default Data-Capture Setups

Setup	Factory Default Setting
Acquisition	
Channels	8
Time Base	001 ms/mm
Window	8 kilosamples/channel
Playback	
Format	8 channels
Start Trigger Percentage	00%
Expansion Factor	01X
Trigger Channel and Location	
Trigger Channel	CH 1
Type of Trigger	Start
Trigger/Window Percentage	01%
Trigger On/Off	On
X and Y Channel Select	X = 1 / Y=2
Sample Rate Clock	Internal

4. **Either accept the current setting by pressing the [ENTER] key or change the setting by pressing either [A] or [C] keys.**

   The display will switch between <USE 2 CH> *and* <USE 8 CH> *indicating that data will be acquired from either 2 channels or 8 channels. Press either key until the display reads as you desire.*

5. **Press the [ENTER] key.**

   The display will read <001MS/MM> *or as last set.*

6. **Either accept the current setting by pressing the [ENTER] key or change the setting by pressing any three numeric keys from [0] through [9].**

   The three digits of the LED display will change to show the new data being entered.

7. **Press the [ENTER] key.**

   The display will read <08 KSMP> *or as last set.*

8. **Either accept the current setting by pressing the [ENTER] key or press any two numeric keys from [0] through [9] to specify the number of kilosamples to be acquired from each channel per snapshot.**

   If you are recording a two-channel snapshot, you can select from 1 to 64 kilosamples.

   If you are recording an eight-channel snapshot, you can select from 1 to 16 kilosamples.

   If you mistakenly enter an invalid kilosample choice, the LED display will momentarily read <INVALID> *and will revert to its previous reading.*

9. **Press the [ENTER] key.**

   The display reads <READY>. *The data you entered have been accepted and you can proceed.*

3-6.1.2 Playback Setup. When a data snapshot has been acquired, the playback setup allows you to specify numerous playback parameters that determine the playout format of your data. Define the playback setup by using the procedures listed below.

1. **Press the [F1] key.**

   The LED display reads <CH. ORDER>.

2. **Press the [4] key.**

   The display reads <DEF PLBK>.

3. **Press the [ENTER] key.**

   The display reads <8-CHNLS> *or as last set.*

4. **Press either the [A] or [C] keys.**

   As the key is pressed, the display will scroll through four selections: <8-CHNLS>, <OVERLAP>, <X-Y>, *and* <NUMERIC>. *This will specify the format of the output data. Press the key until the display reads as you desire.*

   <8-CHNLS> *indicates that data playback will consist of eight individual 40 mm channels of analog waveforms.*

   <OVERLAP> *indicates that data playback will consist of two channels each containing four overlapped waveforms.*

   <X-Y> *indicates that data playback will consist of two analog waveforms plotted as an X-Y graph.*

   <NUMERIC> *indicates that data playback will consist of Datalogger output: eight channels of tabular, numeric lists.*

5. **Press the [ENTER] key.**

   The display reads <ST 00%> or as last set. This indicates the "start percentage" or the start point of your playback. This parameter allows you select the start point of the playback. The percentage shown is the percentage of data that will be suppressed during the playback. The data are not deleted. They are simply not printed when the snapshot is printed. Thus, if you specify 25%, the last 75% of the snapshot data will be replayed. In effect, you can narrow the window of your snapshot to examine only those data of interest to you.

6. **Press any two numeric keys from [0] through [9] to specify the percentage of the snapshot window to be suppressed when the snapshot is printed.**

   The display will change to show the digits entered.

7. **Press the [ENTER] key.**

   The display reads <EX BY 01> or as last set. This indicates the expansion factor that will be applied to the snapshot data. The recorder uses linear interpolation to expand the output presentation from 1 to 25 times.

8. **Press any two numeric keys from [0] through [9] to specify the expansion factor you desire.**

   The display will change to show the digits entered.

9. **Press the [ENTER] key.**

   The display reads <READY>. You can proceed.

3-6.1.3 Trigger Channel and Location Setup. Data snapshots can be obtained either on-demand or as a result of certain predefined conditions (triggers). The trigger channel and location setup allows you to specify (1) the channel in which a trigger will occur, (2) the type of trigger (start, center, end), and (3) the trigger/window relationship. Only one trigger channel can be active at any given time.

Either accept the defaults provided for this setup or enter the trigger data you desire by following the procedure given below.

1. **Press the [F1] key.**

   The LED display reads <CH. ORDER>.

2. **Press the [3] key.**

   The display reads <DEF TRIG>.

3. **Press the [ENTER] key.**

   The display reads <TR CH 1> *or as last set. This display indicates the current trigger channel.*

4. **Either accept the setting by pressing the [ENTER] key or change the setup by pressing any single numeric key from [1] through [8].**

   The display will change to show the digit entered.

5. **Press the [ENTER] key.**

   The display will read <START> *or as last set.*

6. **Press either the [A] or [C] keys.**

   The display will scroll through four settings: <START>, <CENTER>, <END>, *and* <T/W 01%> *to specify the desired trigger position.*

   <START> *indicates a start trigger. Data acquisition begins when a trigger is sensed. No pretrigger information is acquired.*

   <CENTER> *indicates a center trigger. When a trigger is sensed, equal amounts of pretrigger and post-trigger data are stored. This is useful if you want to view data acquired before the trigger occurred.*

   <END> *indicates an end trigger. When a trigger is sensed, only pretrigger data are acquired. Again, this is useful if you want to view data acquired before the trigger occurred.*

<T/W 01%> indicates a percentage trigger. When a trigger is sensed, specified percentages of pretrigger and post-trigger data are obtained. For example, <T/W 25%> indicates that the snapshot window will consist of 25% pretrigger data and 75%post-trigger data.

Stop scrolling when the LED display reads as you desire.

7. **If you chose <START>, <CENTER>, or <END>, press the [ENTER] key.**

   The display will read <READY>. *The setup is complete and you can proceed.*

8. **If you chose <T/W 01%>, either accept the default value by pressing [ENTER] or specify the placement of the trigger within the window by pressing any two numeric keys from [0] through [9].**

   The display will change to show the digits entered.

9. **Press the [ENTER] key.**

   The displays reads <READY>. *The data have been accepted and you can proceed.*

3-6.1.4 Trigger On/Off Setup. The trigger on/off setup allows you to specify whether or not a particular channel will sense a predefined trigger. The factory default sets this condition to ON.

Either accept the default condition or change it using the procedure given below.

1. **Press the [F2] key.**

   The LED display reads <EDIT CH>.

2. **Press the [4] key.**

   The display reads <TRIGGER>.

3. **Press the [ENTER] key.**

   The display reads <TRIG ON> *or as last set.*

4. **Press either the [A] or [C] keys.**

   The display will toggle between <TRIG ON> *and* <TRIG OFF>. *Press either key until the LED display reads as you desire.*

5. **Press the [ENTER] key.**

   The display reads <READY>. *Your choice has been accepted and you can proceed.*

3-6.1.5 X and Y Channel Select Setup. The X and Y channel select setup allows you to specify two analog data channels to be printed as an X-Y plot. These two channels would also be used by the recorder during a two-channel snapshot. This set-up defaults to channel 1 (X) and channel 2 (Y).

Accept the default settings by pressing the [ENTER] key repeatedly. This will scroll through and accept each default setting. Select the X and Y channels of your choice by following the steps given below.

1. **Press the [F1] key.**

   The LED display reads <CH. ORDER>.

2. **Press the [5] key.**

   The display reads <SET X-Y>.

3. **Press the [ENTER] key.**

   The display reads <X IS 1> *or as last set.*

4. **Press any single numeric key from [1] through [8] to specify the channel you desire represented along the X axis of the plot.**

   The display will change to show the digit you entered.

5. **Press the [ENTER] key.**

   The display reads <Y IS 2> or as last set.

6. **Press any single numeric key from [1] through [8] to specify the channel you desire represented along the Y axis of theplot.**

   The display will change to show the digit you entered.

7. **Press the [ENTER] key.**

   The LED display reads <READY>. The selections you made have been accepted and you can proceed.

3-6.2 Acquire Single Snapshot: Mode 5

The acquire single snapshot mode enables the recorder to capture a single "snapshot" of data. The recorder captures data snapshots from the channels defined by the acquisition setup (3-6.1.1): either 2 specified channels or all 8 channels. Event markers are not captured in this mode. It is important to note that this mode performs only one function: it captures data. You must use the playback single snapshot mode (3-6.3) to replay the captured data. To access this mode, establish your setups and follow the procedure presented below.

Data Capture Setups

Acquisition	[F1] [6] [ENTER]
Playback	[F1] [4] [ENTER]
Trigger Channel and Location	[F1] [3] [ENTER]
Trigger On/Off	[F2] [4] [ENTER]
X and Y Channel Select	[F1] [5] [ENTER]
Sample Rate Clock	[F2] [5[[ENTER]

Real-Time Setups Applicable to Data Capture

Event or Annotation	[F1] [2] [ENTER]
Annotation Entry	[F2] [0] [ENTER]
Grid Printing On/Off	[F1] [1] [ENTER]
Channel Order	[F1] [0] [ENTER]
Signal Polarity Reverse	[F1] [7] [ENTER]

Enter the Mode

1. **Press the [MODE] key.**

   The LED display reads <8 CH RT>.

2. **Press the [5] key.**

   The display reads <SING SS> *indicating that you are about to enter the single snapshot mode.*

3. **Press the [ENTER] key.**

   The display reads <ACQUIS> indicating that the recorder is awaiting a single snapshot acquisition. The recorder waits in a neutral state until a trigger is sensed. A trigger can be caused in one of three ways:

   - manually through the front-panel TRIG pushbutton (3-2.5)
   - externally through the rear-panel TRIG BNC connector (3-3.15)
   - manually by adjusting the SLOPE and LEVEL controls of the front-panel trigger definition group (3-2.5)

   When a trigger is sensed, the trigger LED momentarily illuminates and the single snapshot is captured. The LED display then reads <READY>. *The recorder is ready to playback the snapshot.*

When the recorder is operating in a real-time mode, a snapshot can be initiated by any of the methods outlined in step 3 immediately above. Although you can initiate a snapshot data acquisition when the MT-9500 is operating in real-time, the characteristics of these data snapshots differ significantly from those of the recorder's single snapshot mode (Mode 5). The MT-9500 leaves real-time operation when the snapshot is taken and replayed. The differences between these two kinds of snapshot data acquisition are described below.

A snapshot initiated while the recorder is operating in real time can be characterized as follows:

- Data capture is always presented as a "START" trigger. Only post-trigger data are acquired.
- Data playback is automatic and immediately follows the acquisition.
- When the data are replayed, real-time recording is immediately resumed and the captured data in RAM memory are lost.

An acquire-single-snapshot (Mode 5) data acquisition can be characterized as follows:

- Data capture can be specified as START, CENTER, END, or TW 01% (3-6.1.3) in accordance with your preference.
- Data playback is not automatic. Playback must be initiated through the playback mode (Mode 6).
- Data are retained after acquisition and can be replayed as often as desired. Playback modes can be varied.
- Data are not lost until the recorder enters another mode, the recorder is powered down, or default values are selected.

3-6.3 Playback Single Snapshot: Mode 6

The playback single snapshot mode enables the recorder to playback a snapshot resulting from a Mode 5 (acquire single snapshot) data acquisition. To access this mode, follow the procedure presented below.

Establish Your Setups

Data Capture	
Acquisition	[F1] [6] [ENTER]
Playback	[F1] [4] [ENTER]
Trigger Channel and Location	[F1] [3] [ENTER]
Trigger On/Off	[F2] [4] [ENTER]
X and Y Channel Select	[F1] [5] [ENTER]
Real-Time Setups Applicable to Data Capture	
Event or Annotation	[F1] [2] [ENTER]
Annotation Entry	[F2] [0] [ENTER]
Grid Printing On/Off	[F1] [1] [ENTER]
Channel Order	[F1] [0] [ENTER]
Signal Polarity Reverse	[F1] [7] [ENTER]

Enter the Mode

1. **Press the [MODE] key.**

   The LED display reads <8 CH RT>.

2. **Press the [6] key.**

   The display reads <PLAYBACK>.

3. **Press the [ENTER] key.**

   The LED display reads <PLAYBACK> *and the recorder immediately begins to replay the captured data. When the snapshot has been replayed, the recorder ceases operation and the display reads* <READY>. *The playback is complete and you can proceed.*

Playback Alternatives

The format alternatives listed below are available when replaying data obtained in single snapshot acquisition.

- Replay data as separate channels
- Replay data as overlapping channels (OM-95 required)
- Replay data as tabular, numeric lists (DL-95 required)
- Replay data as an X - Y plot

3-6.4 Continuous Snapshot (Untriggered): Mode 2

The continuous snapshot (untriggered) mode enables the recorder to enter a continuous cycle of automatic, untriggered data captures and playbacks. When this mode is initiated, the cycle will continue until halted by operator intervention. Remember that the type of snapshots that the recorder acquires are defined by the acquisition and playback setups. Snapshot playback is automatic and the waveform playout cannot be altered. Captured data are lost from the recorder's RAM immediately upon playback. To access this mode, follow the procedure presented below.

Establish Your Setups

Data Capture

Acquisition	[F1] [6] [ENTER]
Playback	[F1] [4] [ENTER]
X and Y Channel Select	[F1] [5] [ENTER]

Real-Time Setups Applicable to Data Capture

Event or Annotation	[F1] [2] [ENTER]
Annotation Entry	[F2] [0] [ENTER]
Grid Printing On/Off	[F1] [1] [ENTER]
Channel Order	[F1] [0] [ENTER]
Signal Polarity Reverse	[F1] [7] [ENTER]

Enter the Mode

1. **Press the [MODE] key.**

   The LED display reads <READY>.

2. **Press the [2] key.**

   The display reads <CON SS U>.

3. **Press the [ENTER] key.**

   The display will briefly read <ACQUIS> *indicating that the recorder is acquiring data.*

   The display will then change to read <PLAYBACK> *and the recorder will playout the captured data.*

   The recorder will toggle indefinitely between the <ACQUIS> *state and the* <PLAYBACK> *state. When in the* <PLAYBACK> *state, the recorder will playout all captured data.*

   Each time a playback occurs, the recorder's RAM is cleared to facilitate the next snapshot acquisition.

4. **To halt the recorder, press the [HALT] key.**

   The recorder will wait in a neutral state. The LED display will read either <ACQUIS> *or* <PLAYBACK> *depending on when the recorder was halted.*

5. **To resume recorder operation, press the [HALT] key again.**

   The recorder will resume the operating condition in which it was functioning before being halted. Operation of the recorder will toggle between <ACQUIS> *and* <PLAYBACK> *and the LED display will switch to show this. Data playout will occur each time the recorder cycles to* <PLAYBACK>.

6. To exit the mode:

- **Press the [HALT] key and then**
- **Press the [ENTER] key.**

The LED display will read <READY>. *You can proceed.*

3-6.5 Continuous Snapshot (Triggered): Mode 3

The continuous snapshot (triggered) mode enables the recorder to enter a continuous cycle of automatic, triggered data captures and playbacks. When this mode is initiated, the cycle will continue until halted by operator intervention. Remember that the type of snapshots that the recorder acquires are defined by the acquisition, playback, and trigger setups. Snapshot playback is automatic and the waveform playout cannot be altered. Captured data are lost from the recorder's RAM immediately upon playback. To access this mode, follow the procedure presented below.

Establish Your Setups

Data Capture	
Acquisition	[F1] [6] [ENTER]
Playback	[F1] [4] [ENTER]
Trigger Channel and Location	[F1] [3] [ENTER]
X and Y Channel Select	[F1] [5] [ENTER]
Real-Time Setups Applicable to Data Capture	
Event or Annotation	[F1] [2] [ENTER]
Annotation Entry	[F2] [0] [ENTER]
Grid Printing On/Off	[F1] [1] [ENTER]
Channel Order	[F1] [0] [ENTER]
Signal Polarity Reverse	[F1] [7] [ENTER]

Enter the Mode

1. Press the [MODE] key.

The LED display reads <8 CH RT>.

2. **Press the [3] key.**

   The display reads <CON SS T>.

3. **Press the [ENTER] key.**

   The recorder enters a neutral state. The LED display reads <ACQUIS> *indicating that the recorder is waiting to perform an acquisition when a trigger is sensed.*

   The recorder will wait in the <ACQUIS> *condition until a trigger that meets the parameters you have already defined is sensed. When a trigger is sensed:*

   - *the recorder acquires a data snapshot*
   - *the recorder automatically and immediately begins playback of the snapshot data*
   - *the LED display changes to read* <PLAYBACK> *during the playback portion of the continuous cycle*
   - *the recorder's RAM is immediately cleared at the conclusion of the playback to facilitate the next snapshot acquisition*
   - *the recorder returns to a neutral state and waits for another trigger immediately after* <PLAYBACK> *is complete*
   - *the LED display changes to read* <ACQUIS> *while the recorder waits for a trigger that will initiate the acquisition of another snapshot.*

   The recorder will toggle between the <ACQUIS> *state and the* <PLAYBACK> *state each time a trigger is sensed. This will continue indefinitely until recorder operation is changed by operator intervention. When in the* <PLAYBACK> *state, the recorder will playout each captured snapshot.*

4. **To halt the recorder, press the [HALT] key.**

   The recorder will wait in a neutral state. The LED display will read either <ACQUIS> *or* <PLAYBACK> *depending on when the recorder was halted.*

5. **To resume recorder operation, press the [HALT] key again.**

   The recorder will resume the operating condition it was functioning in when halted. Operation of the recorder will toggle between <ACQUIS> *and* <PLAYBACK> *and the LED display will switch to show this.*

6. **To exit the mode while the recorder is in the <ACQUIS> state, press the [HALT] key.**

   The LED display will read <READY>. *You can proceed.*

7. **To exit the mode while the recorder is in the <PLAYBACK> state:**

   - **Press the [HALT] key and then**
   - **Press the [ENTER] key.**

   The LED display will read <READY>. *You can proceed.*

Section 4
Theory of Operation

4-1 Major Electronic Components

The major electronic components of the MT-9500 recorder can be divided functionally into three groups: system control, data acquisition, and print engine. Figure 4-1 presents a block diagram of these groups and their subcomponents. Each major group is briefly discussed in the paragraphs below.

4-1.1 System Control

System control is provided by the system microprocessor. The microprocessor is located on the Central Processing Unit (CPU) board. The processor receives commands from the keyboard processor or host computer and coordinates the activities of the remaining components. The system bus located on the mother board is the primary path for internal communication.

The Input/Output (I/O) board plugs into the system bus and acts as an extension of the system processor. The keypad processor is located on the I/O board. It controls the front panel display and connects to the system processor through an onboard, bi-directional parallel port. The keypad processor is fully independent and dedicated to the front panel user interface and to time keeping functions.

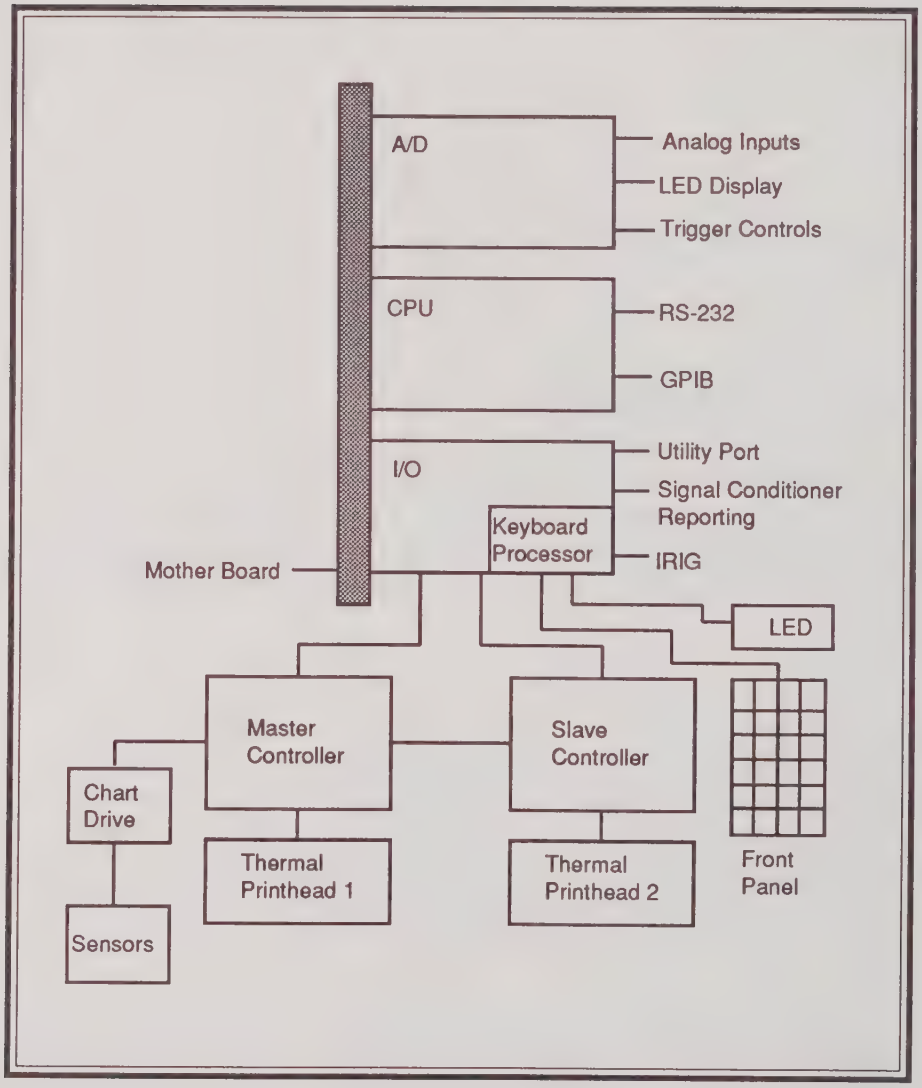

Figure 4-1. Major Electronic Components

4-1.2 Data Acquisition

Data acquisition can be defined as the conversion of eight channels of analog data into a form of digital data suitable for recording. This is accomplished by circuitry on the Analog to Digital (A/D) conversion board. In addition, the A/D board contains electronics for signal conditioning and analog trigger processing.

4-1.3 Print Engine

The print engine consists of two units arranged in a master/slave relationship. Under the direction of the system processor, the master print engine unit controls the chart drive. The slave unit operates in conjunction with the master unit but does not control the chart drive. Sensor circuitry for interlock errors and top-of-form (TOF) detection is included in the print engine.

4-2 Recorder Self-Test

Each time power is applied to the recorder, the MT-9500 performs a series of self-tests. When self-testing detects an error, the front-panel LED display shows an associated error message. A list of error messages that may be encountered upon recorder power-up is presented in table 2-1 of this manual.

Understanding the recorder's self-test sequence is helpful in interpreting error messages. The first test performed is by the keypad processor on its own circuitry. The keypad processor controls the keypad and the front-panel LED display and is independent of the system processor. After testing its own circuits, the keypad processor attempts to communicate with the system processor. If communication is unsuccessful, the LED display will read <ERROR 1>.

When the keypad processor and the system processor are linked, the system processor performs a memory check. If the memory check fails, the system processor instructs the keypad processor to initiate an <ERROR 2> display. After system memory has been checked, a variety of other tests are performed on peripheral circuits.

Following the testing of peripheral circuitry, the status of the print-head controllers is tested. Each print-head controller performs its own self-test and reports the results to the system processor.

The data-acquisition electronics on the A/D board are tested last in this sequence.

4-3 Software Package (Copyrighted)

At the completion of the recorder self-test procedures, the LED display will briefly show a four digit software configuration number (SCN). The software number identifies the installed copyrighted firmware package and indicates how recent it is. The first two digits of the SCN represent the software package number. Several firmware packages, each copyrighted and each with its own capabilities and limitations, are available for the recorder. The general purpose firmware package is numbered 01. The second pair of digits of the SCN indicate the version of the firmware installed in the recorder. The larger the number formed by these two last digits, the more recent the firmware package.

A firmware package consists of a set of integrated circuits (ICs) referred to as Programmable Read-Only Memory (PROM). PROMs are physically located on several boards within the recorder. The software configuration number is useful and valid if:

- the PROMs were installed as a set
- any software upgrades have included modifications to the keypad processor PROM on which the SCN is maintained

Each PROM is identified by a label that lists a part number and software version number. Astro-Med Customer Service can use this information to verify the accuracy of the SCN.

4-4 Principles of Direct Thermal Recording

Direct thermal recording is used to print the waveform representations and alphanumeric data output by the MT-9500. Direct thermal recording requires:

- thermally sensitive paper
- a thermal printhead
- a method for controlling the energy supplied to the printhead

A thermal printhead consists of a series of closely spaced resistive elements mounted on a nonconductive material. The assembly is coated with a protective glaze and mounted on a heat sink. A drive roller or platen holds the thermal paper against the glaze. The platen is made of a soft rubber that ensures uniform contact between the printhead and thermal paper.

When voltage is applied to the resistive elements of the printhead, current flows and generates heat. The heat is conducted through the protective glaze to the paper. Heat is also conducted to the heat sink on which the printhead is mounted. Thermal paper darkens with the application of sufficient heat. Astro-Med thermal paper marks clearly when exposed to about 80 °C. The energy required to raise the paper surface to this temperature varies with paper speed, glaze thickness, paper temperature, element temperature, etc.

4-4.1 Strobe and Strobe Length

Three factors determine the amount of energy applied to each element of the printhead: the voltage across the element; the amount of time the voltage is applied; and the resistance of the element. For the MT-9500, voltage is normally fixed at 24 volts. In response to printing conditions, the printhead controller varies the time the voltage is applied.

This applied voltage pulse is referred to as the "strobe." The time period during which voltage is applied to the element is referred to either as "on time" or "strobe length." Strobe length is usually between 100 and 600 microseconds.

4-4.2 Energy Control Mechanisms

Sophisticated regulation of the energy applied to the printheads is required when using the printheads at high speeds. This is necessary to ensure trace quality and enhance printhead life. Several mechanisms are used by the recorder to regulate the energy applied to the printheads: temperature feedback, current feedback, and dot history. Temperature feedback and current feedback act to shorten the strobe length and, consequently, reduce energy flow.

Each printhead controller contains a microprocessor that monitors the current requirements and the temperature of its associated printhead. Current is sensed by a shunt resistor in the 24-volt return path. Temperature is measured by a thermistor mounted in the printhead. Increases in either current or temperature cause the microprocessor to reduce strobe length. This reduces the amount of energy available to the printhead. Current feedback (present during extreme printing conditions) can cause traces to appear lighter than normal. The recording of multiple, full-scale, high-frequency waveforms is an example of an extreme printing condition. The average current that the printhead can draw is limited by the power supply. When this limit is reached, the power supply automatically shuts down to avoid printhead damage. This does not happen under normal conditions because the printheads do not receive current directly from the power supply. The printheads obtain their electrical power from a large, fast capacitor capable of providing very large currents for short periods of time. This ensures the recorders ability to create full-scale line segments with no fade.

Although these mechanisms limit overall or "global" energy consumption, they cannot prevent a small section of dots from being excessively energized. This is a result of thermal inertia that causes individual resistive elements to cool gradually rather than instantly. At high print rates, resistive elements may have insufficient time to cool before being re-energized. Over several cycles, this can have the cumulative effect of raising element temperatures to unacceptable levels. Eventually, this results in element damage.

Dot history is the mechanism used to counteract the thermal inertia properties of the print elements. Each printhead controller contains dedicated circuitry that maintains records of those dots energized during previous cycles. Information regarding the print elements to be fired during a given cycle is conditioned by the thermal history of the individual elements.

A printing element experiencing heat build-up from previous firings will not be fired during successive cycles. The implementation of this simple concept is complex and takes into account the temperature of neighboring elements.

4-5 Chart Drive

All MT-9500 recorders use a four-phase, unipolar stepper motor to drive the chart paper. However, chart-drive enhancements have resulted in three levels of motor control electronics.

Early chart-drive systems provide a maximum speed of 100 mm/s. These systems employ a bi-level drive that has a 5-volt holding voltage and a 24-volt pulsed voltage. A simplified circuit diagram of the initial chart-drive system is provided in figure 4-2. Its associated timing diagram is presented in figure 4-3.

The blocks in figure 4-2 represent switches implemented with Darlington transistor arrays. The purpose of switches A, B, C, and D is to ground individual motor phases. The phases are paired and share a common supply path. Normally, the common path is connected to the 5-volt holding voltage. When a phase is first energized, the common path is switched to 24 volts. The higher voltage helps to overcome the inductance of the windings. To prevent excessive current to the windings, the 24 volts are applied for approximately 1 millisecond. At high motor speeds, the 24-volt current is on almost constantly because the interval between steps is small.

A sequencing circuit implemented in programmable array logic controls the pattern of phase excitation. The recorder uses a sequence sometimes referred to as half stepping or one-two-phase excitation. This description is meant to indicate that the step angle is one half that of simpler control methods. Each time the motor control logic is strobed, the chart drive moves 1/16 mm. Motor Control Board P/N: 31220-X contains this circuitry.

A single TTL strobe line is the input to the motor control circuit. During real time recording, chart speed is determined by the frequency of pulses on this line (paper speed in mm/s = strobe frequency/16). The recorder's system microprocessor determines the frequency of pulses.

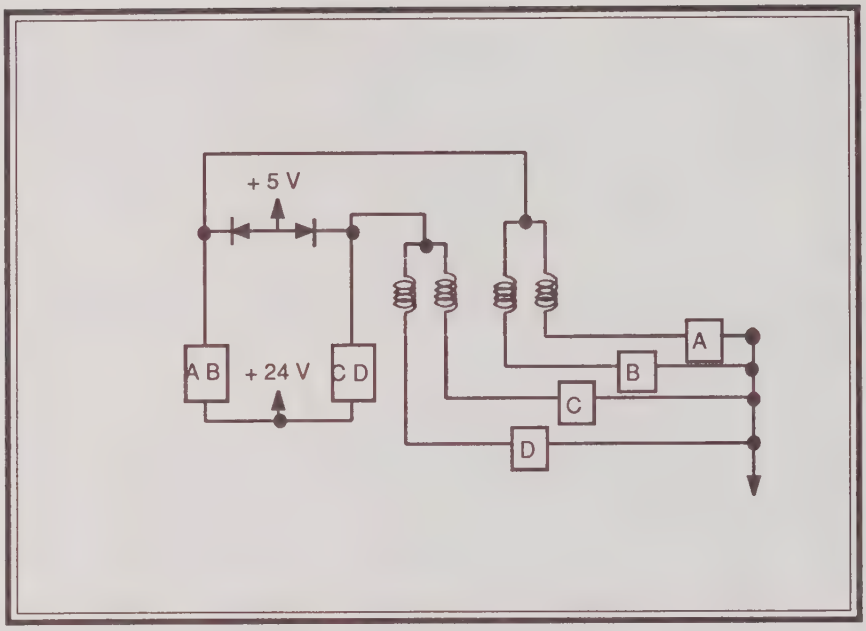

Figure 4-2. Simplified Circuit Diagram

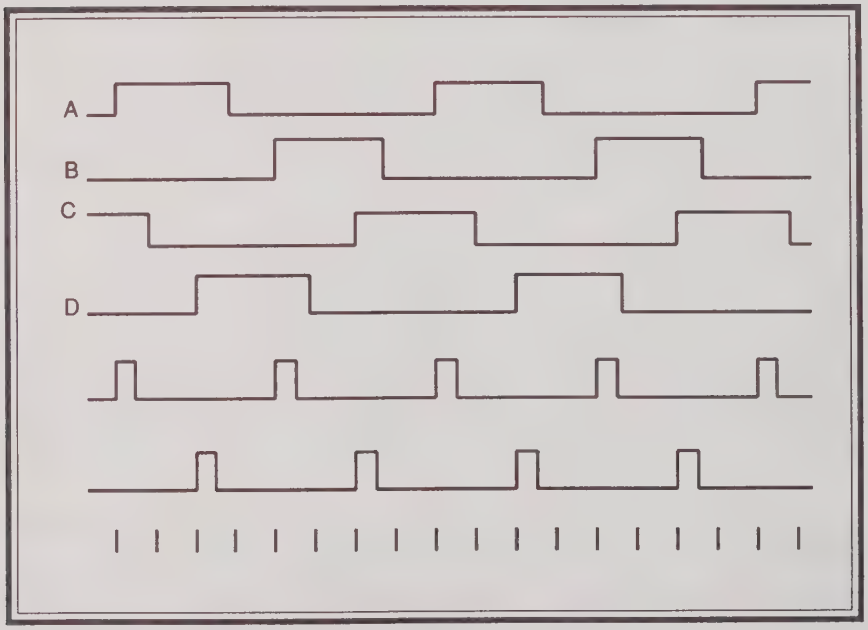

Figure 4-3. Simplified Timing Diagram

Recorders that have a maximum chart speed of 200 mm/s employ a second type of motor drive. In addition to Motor Control Board P/N: 31220-X, the motor control electronics of these recorders use a second control board. Additional power supplies augment motor power. The additional board is the P/N: 41530-X ramp board. The ramp board is required because the recorder cannot instantly change speed from stop to 200 mm/s. The motor must be accelerated (ramped up) at a slower rate to avoid stalling. The ramp board conditions the motor strobe frequency before it is sent to the motor control circuits. Ramp circuitry is activated when a change in motor frequency exceeds a preset reference frequency. This would indicate that a high chart speed is required. When the ramp circuitry is activated, a phase-locked loop gradually increases the frequency supplied to the motor control circuit. The ramp rate is adjustable.

A chopper wheel has been added to the motor shaft of all recorder's with the 200 mm/s maximum chart-speed feature. The chopper wheel and an associated infrared sensor provide the ramp board with a frequency proportional to the chart speed. This is used to detect stall conditions that trigger the ramp circuit to restart.

Recorders with a maximum chart speed of 500 mm/s utilize a third level of motor control circuitry. In these recorders, Motor Control Board PN: 41626-X replaces both PN: 31220-X and PN: 41530-X. PN: 41626-X uses micro-stepping to reduce motor noise and achieve high chart speeds.

4-6 Top Of Form

The recorder can use either roll or Z-fold thermal chart paper. When Z-fold paper is used, it may be desirable to start certain types of output at a point just below the Z-fold perforation: the top of form (TOF). Each sheet of Z-fold chart paper is marked with a black rectangle referred to as the index mark or TOF mark. Roll thermal paper has an index mark every 280 mm.

When the TOF moves under the TOF sensor, it is detected by circuitry on the printhead controller. The TOF sensor consists of an infrared emitting diode and a silicon phototransistor mounted in a plastic housing. The angles of both the diode and the phototransistor are fixed. They are arranged so that a reflective surface approximately 0.12 inches distant from the sensor assembly will cause the phototransistor to conduct. Because the TOF mark is nonreflective, the phototransistor does not conduct. During real-time recording, the TOF mark is ignored by the recorder.

Support circuitry for this assembly consists of

- a bias for the transistor
- a comparator with hysteresis to detect transistor conduction changes

Figure 4-4 presents a typical circuit. The potentiometer is used to adjust the circuit for optimal performance. The comparator creates a logic level that is monitored by both the printhead controllers and the system controller.

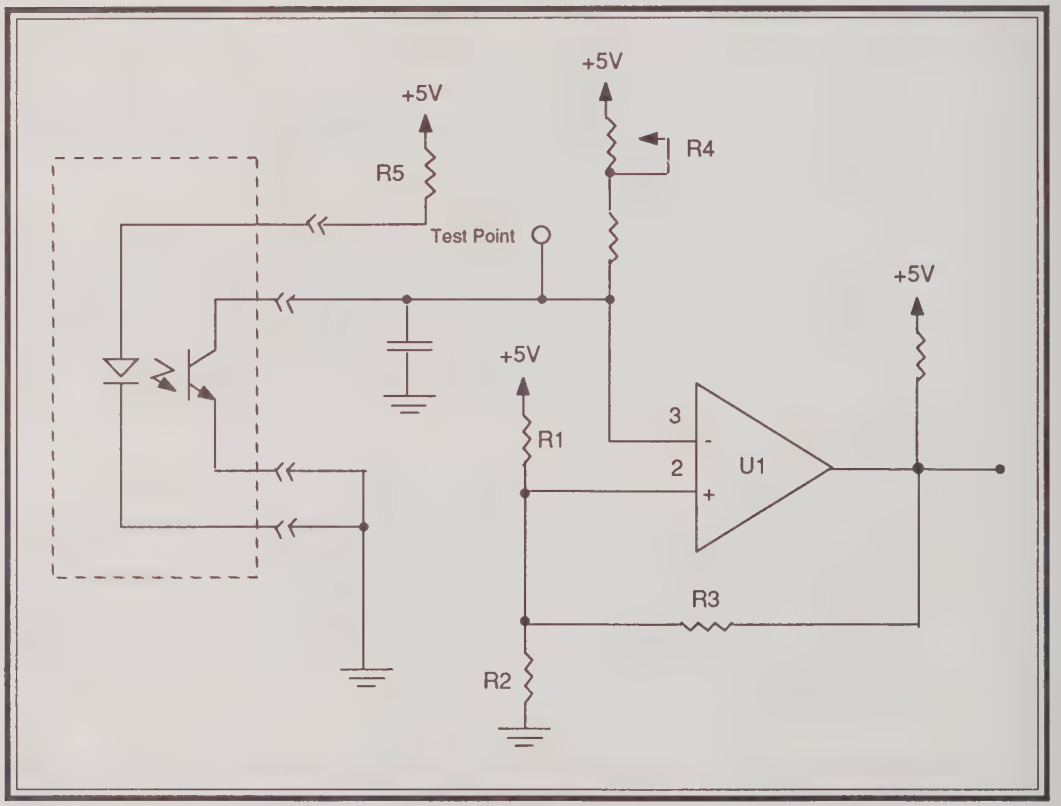

Figure 4-4. Emitter/Sensor Circuit Assembly

4-7 Interlock

An infrared emitter/sensor assembly similar to the TOF monitor is mounted just above the paper tray. When the paper-chamber door is closed and the thermal paper is properly loaded, the infrared light is reflected by the paper. The reflected infrared activates a transistor sensor. The sensor data are converted to a logic level that indicates either "door open" or "no paper". The system controller monitors the interlock level and causes the front-panel LED display to show the appropriate message. The logic level is also used to gate the printhead strobe pulses. This ensures that the printhead will not be energized during an interlock condition.

4-8 Real-Time Analog Recording: Analog Section

Figure 4-5 is a schematic of a single MT-9500 analog channel. These circuits are located on the A/D board (P/N-41210-X). The output of such a circuit connectors to a multiplexer. The multiplexer determines which input is sent to the A/D converter.

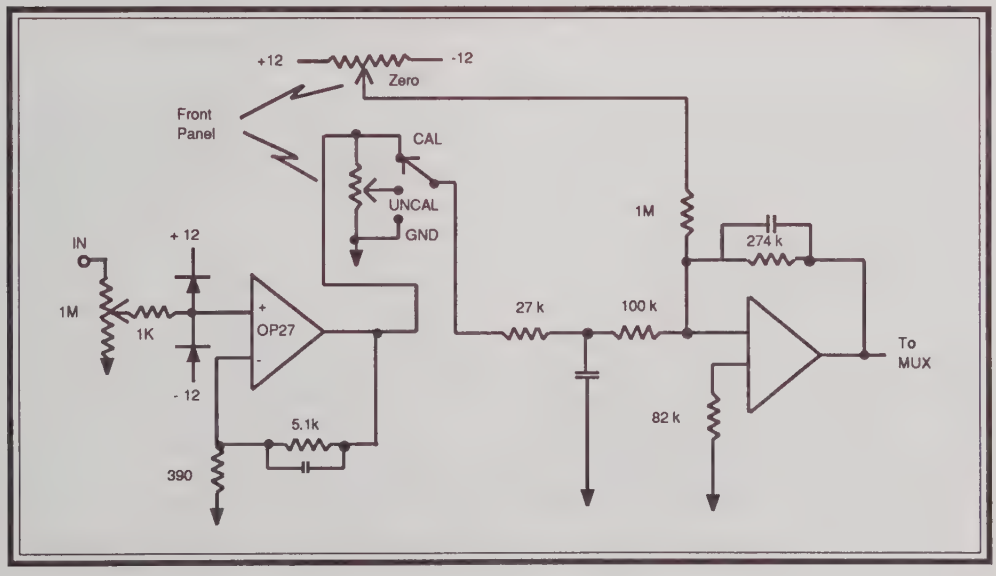

Figure 4-5. Analog Input Channel

The circuit can operate in three states: CAL, UNCAL, or GND.

In the GND state, input to the second stage is connected to common. This provides a baseline reference. The GND state can also be employed to prevent unused channels from acquiring or recording noise.

In the CAL state, gain is determined by the fixed gain of each stage and an input voltage divider. A trim potentiometer that is used to calibrate the system determines the value of the divider. Calibration of standard units is such that an input voltage of 10 mV results in a 1-division deflection on the chart. This is approximately the mid-range of the potentiometer. This provides a full scale input range of 0.4 V for systems with 40-division charts.

The recorder's full scale voltage range can be recalibrated either in the field or, if requested, at the factory. Because the recalibration adjustment is a divider rather than a gain factor, sensitivity can be only slightly enhanced. If the channel is made less sensitive, input ranges to a maximum of 5 volts are possible. Although voltages in excess of 5 volts can be achieved, they are not recommended. These high voltages require that the potentiometer be operated at the extreme of its practical range. Instability could result.

Special versions of the board are available with modifications to the fixed gain resistors. These modifications enable input voltages of up to 10 volts to be accommodated.

In the UNCAL state, the first stage output passes through a second voltage divider. It then goes to the second stage. The value of the divider is determined by the front-panel potentiometer labeled "GAIN." In the UNCAL mode, the maximum gain equals the gain in the CAL mode. This provides a method for reducing the appearance of the recorded trace. This is of particular value when waveforms are overlapped. As is clear from the circuit depicted in figure 4-5, this attenuator can only increase the input range by a small amount. The limiting factor is saturation of the first stage. If increased range is required, calibration should be modified as previously described. The capacitor located in the feedback circuit of the second stage acts as a low pass filter that determines the frequency response of the channel. Acting to prevent aliasing, the frequency response of the standard MT-9500 is:

- flat within 1 dB to 3 kHz and
- down 3 dB at 5 kHz.

4-9 Real-Time Analog Recording: Data Acquisition

The following aspects of data acquisition are discussed in the paragraphs below: waveform sampling, the min/max recording approach, and frequency response.

4-9.1 Waveform Sampling

The MT-9500 records analog waveforms by (1) sampling the waveforms at high speed, (2) converting the samples into line segments, and (3) printing these segments on the chart. The circuitry that controls waveform sampling can be described as a "state machine." This refers to the fact that the circuit is driven from one state of operation to the next at a fixed clock rate. Figure 4-6 is a simplified diagram of the states through which the sampling circuitry sequences. The sampling sequence is repeated for each channel in turn. The sequence is repeated at a fixed rate for the duration of recorder operation.

An analog multiplexer connects each of the analog inputs to a track-and-hold circuit. The voltage is locked in this circuit while it is being converted to digital values. This is performed by the A/D converter. An overall sample rate of 240 kHz enables the A/D converter to convert a channel in less than 4.2 microseconds. Channels are sampled a minimum of 30,000 times each second.

The A/D converter is a high speed, 12-bit, successive approximation device. Its nonlinearity is better than 0.012%. A full 12-bit conversion is performed. However, because the least significant bit is not required for recording, it is ignored.

4-9.2 Min/Max

The min/max algorithm emulates an ideal pen recorder or oscillograph with a very high frequency response. When recording high frequencies at low chart speeds, this ideal device draws lines between the maximum and minimum input values. A pulse train appears as a sequence of lines. A sine wave appears as a solid band. Signal amplitude is reproduced correctly regardless of paper speed.

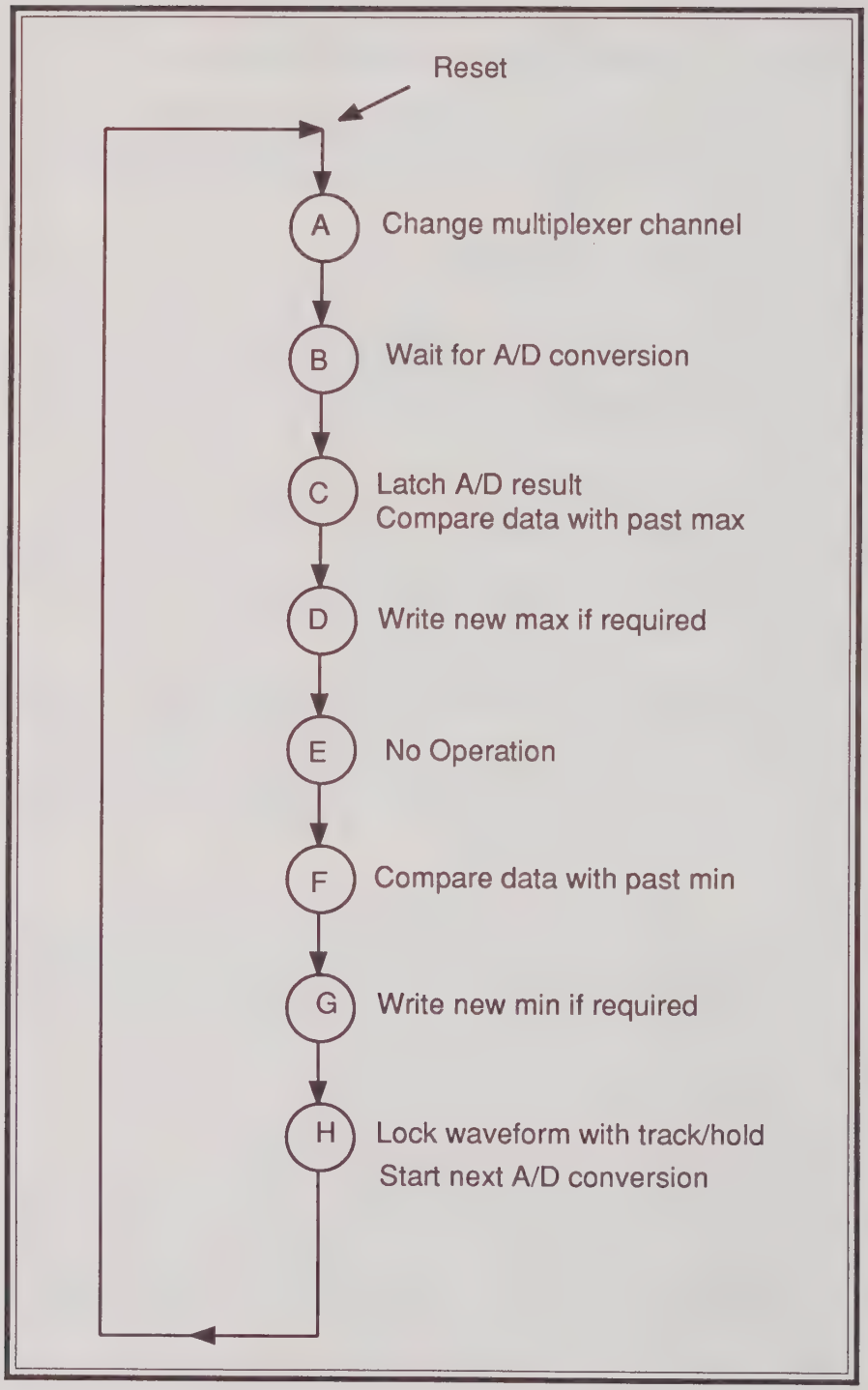

Figure 4-6. Sampling State Diagram

In a similiar manner, the MT-9500 recorder reproduces a waveform as a series of lines. At most paper speeds, the lines are printed very close together. The resulting waveform has the appearance of a waveform produced by a traditional pen recorder having a very high frequency response. At higher speeds, limits on the printing rate may give the waveform a slightly digitized appearance.

The min/max algorithm is implemented by a state machine. When a channel has been sampled, the result is compared to the previous maximum value for that channel. If the newly sampled data point is larger than the previous maximum value, the new data point becomes the new maximum value. Similarly, minimum values are compared and replaced with smaller values as they are sampled. Data points that do not exceed maximum or minimum values are discarded.

Min/max data points are computed over a relatively short time period. Old maximum and minimum values are reset to the current value of the waveform at the beginning of the time period. Therefore, the min/max pair defines changes in the waveform over only a brief time period. Frequently, the maximum value will equal the minimum value. This indicates that the waveform did not change significantly during the period of interest.

As each line is drawn, the MT-9500 concurrently:

- collects the current min/max pair, and
- resets the min/max pair to the current waveform value.

Consequently, each line represents only the change in the waveform that occurred from the time that the last line was drawn. For slow changing waveforms, only a point is drawn each cycle because the maximum and minimum values are usually equal. High frequency events are sensed and recorded even at very low speeds. Frequency response is dependent on only the basic sample rate of 30 kHz per channel. Frequency response is not dependent on the writing rate which varies with speed.

4-9.3 Frequency Response

The term "frequency response" is more appropriately applied to old-technology electro-mechanical devices. To a substantial degree, the frequency response of the MT-9500 reflects the characteristics of the previously discussed anti-alias filter. The frequency response specifications for the recorder are: amplitude within 1 dB at 3 kHz and within 3 dB at 5 kHz.

The sample rate of each channel is the fundamental limit on frequency response. Generally, a sample rate of ten times the frequency is considered adequate to reproduce a signal.

When discussing digital devices, one method for calculating frequency response is to consider the case of a sinusoid being sampled at regular intervals. As shown in figure 4-7, the worst case occurs when samples are adjusted to be as distant from the peaks as possible.

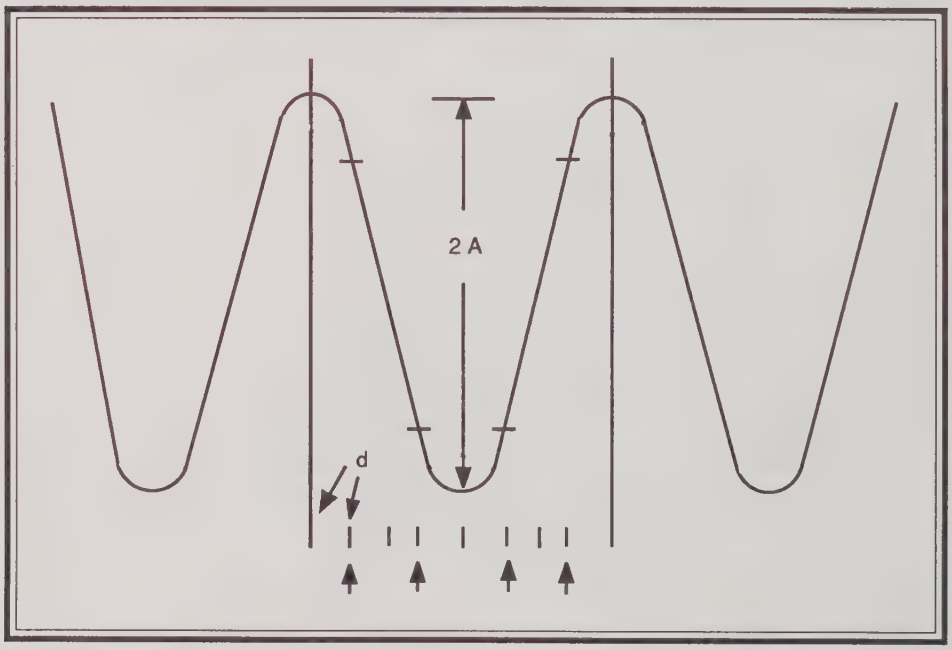

Figure 4-7. Worst-Case Frequency Response

In measuring the peak of the sinusoid, error is dependent on the number of samples that occur during a single cycle. Distance between the sample points is expressed in degrees as 360/n, where n is the number of points per cycle. If n is an even number, the worst case distance (d) between the nearest sample point and the waveform peak is given by:

$$d = [360/2n]$$

The value obtained when considering the nearest sample to the peak is given by:

$$x = A*\cos(d) \text{ where } A = \text{sinusoid amplitude}$$

Error can be calculated as a percentage of the peak:

$$PE = [1-\cos(d)] * 100$$

Error can also be calculated in dB:

$$dB = 20*\log[x/A] = 20*\log[\cos(d)]$$

For n = 8, the result is:

$$d = 22.5 \text{ deg}, x = 0.924, PE = 7.6\%, dB = -0.68$$

For n = 6, the result is:

$$d = 30.0 \text{ deg}, x = 0.866, PE = 13.4, dB = -1.2$$

For the MT-9500:

n = 8 occurs at 3.75 kHz
n = 6 occurs at 5 kHz

4-10 Resolution

The level of detail that can be seen or "resolved" on the chart is referred to as resolution. Resolution should not be confused with frequency response. Frequency response describes the ability of the oscillograph to respond to a changing input. When discussing older-technology pen recorders, resolution is usually described in terms of trace thickness and the speed of the chart. In practice, resolution is also influenced by the system's linearity.

Chart speed, linearity, and a factor similar to trace width also influence the resolution of new-technology oscillographs. The trace-width factor depends on the size of the print elements and the distance between print elements. In comparison to the older-technology recorders, the nonlinearity of the MT-9500 is insignificant. As a result, the resolution of the MT-9500 can be specified in dots per millimeter (dots/mm). The resolution of the thermal printhead is fixed at 8 dots/mm (200 dots/inch).

If it is sufficient to avoid the requirement for interpolation, the resolution of the A/D converter will not be a factor in chart resolution. Because a 40 mm channel contains 320 dots (8 dots/mm), only the most significant 9 bits of data are required. The most significant 11 bits are used when the channel width is extended to 160 mm (1280 dots). When recording real-time waveforms, the MT-9500 uses no interpolation.

NOTE

The number of steps available from an A/D with N bits is: 2N-1.

In the time axis, resolution is determined by:

- motor step resolution and
- writing rate
  (speed at which the printhead generates new lines)

At most chart speeds, the recorder prints a new line with each step of the motor. This results in a resolution of 16 dots/mm. The writing rate required to print a new line with each step is equal to the chart speed multiplied by 16. Earlier recorder models have a maximum writing rate of 800 Hz. More recent models of the recorder have a maximum writing rate of 1600 Hz. The following data describe chart resolution in the time axis as a function of speed.

Max. Write Rate	0 - 50 mm/s	51 - 100 ms	101 - 200 ms
800 Hz	16 dots/mm	8 dots/mm	4 dots/mm
1600 Hz	16 dots/mm	16 dots/mm	8 dots/mm

The above discussion applies to absolute resolution. In many cases, resolution as a percentage of the full scale is what is of practical importance. For example, if a recording system can resolve detail to within 0.125 mm and full scale is 40 mm, details of up to 0.3% can be seen. If absolute resolution is maintained but full scale is increased to 160 mm (as in the Overlap mode of the MT-9500), details as small as 0.08% become visible.

4-11 Time Annotation

The system log is automatically annotated by the recorder with the current time and date. The system log begins with the symbol "<." This indicates the point on the chart referred to by the subsequent information. Two sources can supply time and date information to the MT-9500: the recorder's real-time clock or an external time code such as IRIG B. In either case, the recorded time is accurate to within the second. It is important to note that, generally, the "<" symbol of the system log is not synchronized to any particular time. Rather, the symbol is spaced so that time and date information appear at least once every two Z-fold pages.

4-11.1 Real-Time Clock

A low power real-time clock maintains the time and date. This device divides the frequency of an intrinsic crystal-referenced oscillator and produces a signal at one-second intervals. The signal updates the time and date and serves as the recorder's time reference. The keypad processor monitors the real-time clock. The keypad processor supplies time and date information to the system microprocessor. A 4.8-volt rechargeable nickel-cadmium (NiCad) battery backs-up the real-time clock. The battery is trickle charged automatically whenever the system power is on. A comparator circuit monitors the 5-volt supply. Whenever the 5-volt power is removed, the comparator switches the real-time clock to battery power. The NiCad needs approximately 24 hours to fully charge. When charged, the NiCad can maintain the time and date for 48 hours. Figure 4-8 is a schematic representation of the real-time clock and battery circuits.

NOTE

The NiCad battery only maintains time and date information. All other parameters are saved in a separate nonvolatile memory.

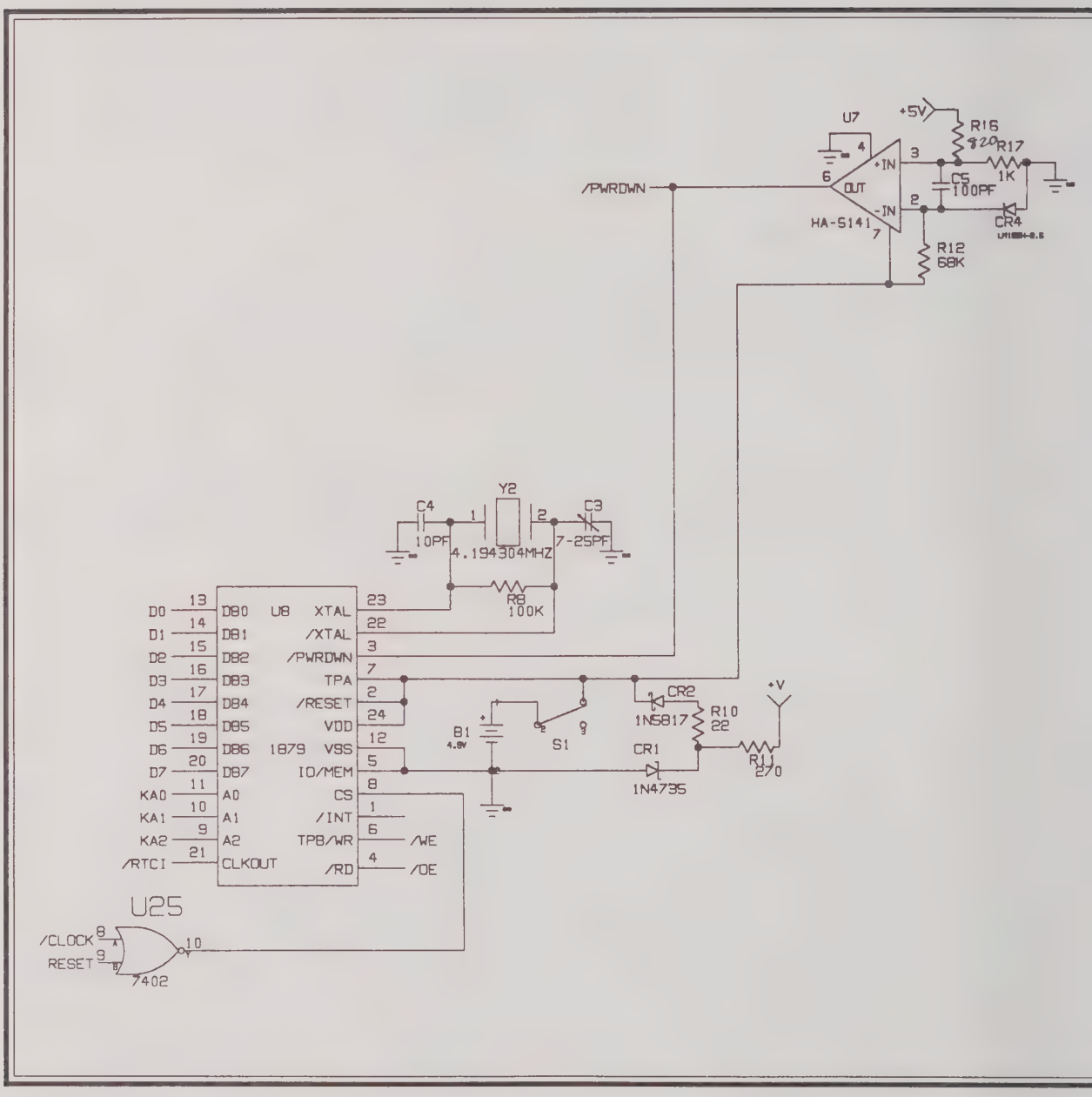

Figure 4-8. Schematic of Real-Time Clock and Battery Circuits

4-11.2 External Time Codes

The MT-9500 can decode several standard serial time codes. It can then print this decoded information in the system log instead of the time reference supplied by the recorder's internal clock. The time codes developed by the Inter-Range Instrumentation Group (IRIG) are the most commonly employed. In IRIG code, time and date information are serially transferred as binary coded decimals (BCDs) using pulse width coding. Currently, the MT-9500 supports IRIG A, B, and H and NASA 36 time codes.

To produce a pulse train, external time codes are available in two forms: modulated on a carrier frequency or demodulated. If the signal is demodulated, the pulse train should be TTL compatible. This means that a zero must be between 0 and 0.8 volts and a one must be between 2.5 and 5 volts. A demodulated time code can be supplied directly to the recorder. Software in the keypad processor decodes the information and provides the data to the system microprocessor.

Modulated time codes must be demodulated and converted to TTL compatible pulse trains. Two Astro-Med circuit boards accomplish this. The earlier circuit board (P/N: 31436-X) lacks an automatic gain control (AGC) circuit and must be calibrated for specific applications. The more recent board (P/N: 41627-X) has a built-in AGC circuit with an input range of 0.5 to 10 volts (peak to peak). When the IRIG option is installed at the factory, the output from the demodulator is wired internally to the standard IRIG input.

4-11.3 Synchronizing the Start of the System Log

The occurrence of the "<" symbol that precedes the system log can be synchronized to print within 10 milliseconds or no more than 1/16 mm at slow paper speeds of the start of the external time code. This increases the accuracy of the system log. A start pulse that indicates the beginning of the external time code must be available to ensure the accuracy. IRIG demodulator board (P/N: 41627-X) is capable of generating a start pulse for IRIG A, B, and NASA 36 time codes. IRIG H is too slow to be used in this manner. If available as a TTL pulse train, IRIG H can be recorded directly by connecting to an event marker.

4-12 Data Capture

The Data Capture option (DC-95) provides the recorder with the ability to increase the time resolution of the recorded waveform. This is achieved by storing sampled waveform data in memory rather than recording the data in real time. Consequently, paper speed no longer acts as the upper limit on waveform resolution. When stored, the waveform information either can be replayed in a variety of formats or transferred to a host computer for analysis.

While capturing data, the MT-9500 cannot record waveforms.

4-12.1 Sample Rate

The previously described data-acquisition state machine fixes the sample rate at 30 kHz per channel. This determines the frequency response of the system. Frequency response for real-time recording and data capture are identical. Resolution is limited by the rate at which the system microprocessor takes min/max pairs from the state machine. When a min/max pair has been acquired for a particular interval of time, it cannot be expanded. Temporal resolution is limited by the time interval between min/max pairs.

The rate at which min/max pairs are acquired is determined when the user selects a time scale in milliseconds per millimeter (ms/mm). The recorder chart drive is based on 16 steps/mm. As a result, the system must acquire 16 min/max pairs each millisecond to achieve a time scale of 1 ms/mm. This is the maximum rate at which the system can collect and save min/max pairs. In general, the rate at which min/max pairs are collected can be calculated as:

16 divided by the specified ms/mm time scale multiplied by 1000

For example, 2 ms/mm requires an 8 kHz min/max sample rate.

4-12.2 Capacity

Within system memory, 512 thousand bytes are available for storage of waveform data acquired during data capture. This data is taken from the min/max state machine. Waveform data are stored as a sequence of min/max pairs that define the waveform for a particular interval of time. Each waveform point requires four bytes: two bytes each for both the minimum and maximum values. A total of 128 thousand waveform points can be saved. Either two or eight channels can be captured. The number of channels chosen (2 or 8) determines the maximum number of sample points saved for each channel.

The number of points captured can be limited by specifying the number of points to be saved. The sample window is the time period during which waveform data is sampled and stored. Sample window length is equal to the number of points to be captured divided by the min/max sample rate.

4-12.3 Triggering

Data sampling can either be initiated immediately or can be synchronized to a triggering event. Figure 4-9 is a block diagram of the recorder's trigger circuitry. There are three primary trigger sources: an analog channel, an external switch closure, or the front panel TRIG pushbutton.

The eight analog inputs are routed (in parallel with the sampling multiplexer) to a multiplexer controlled by the system microprocessor. The selected analog channel is switched to a particular circuit. This circuit compares the analog channel voltage to a reference voltage determined by the front-panel trigger level potentiometer. As it crosses the reference voltage, the analog input changes the state of the output transistor.

Blocks A and B of figure 4-9 are mono-stable multivibrators (one-shots). One multivibrator triggers on a rising edge and the other on a falling edge. In this way, the slope of the selected trigger source can be detected. The rise and fall levels are OR'd together. If the waveform crosses through the reference voltage from either direction, the rise and fall levels generate a pulse.

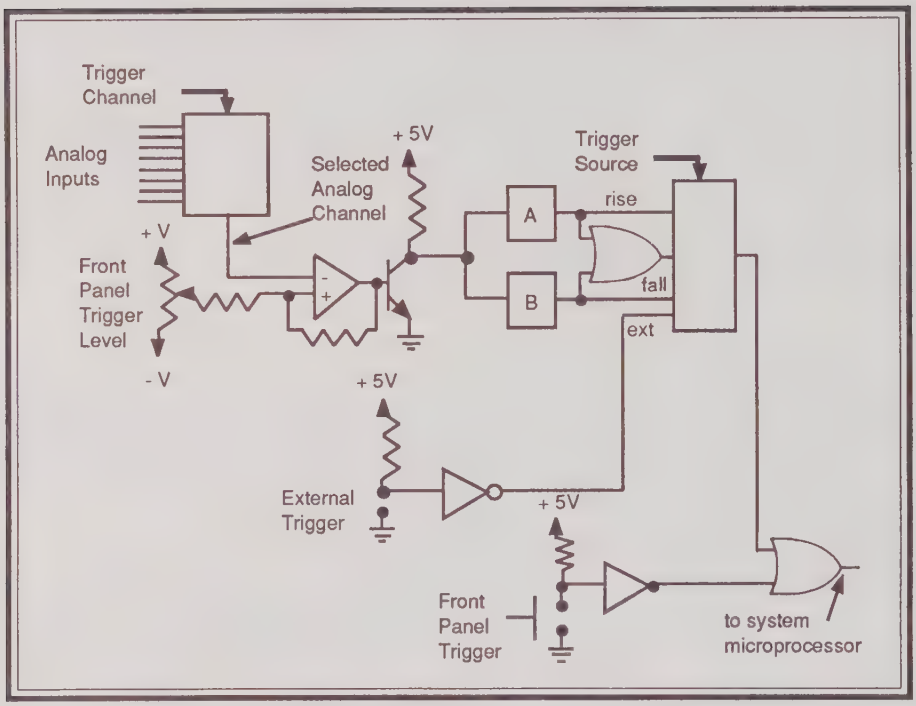

Figure 4-9. MT-9500 Trigger Circuitry

A rear panel connector is provided for an external trigger. A trigger is first conditioned by a Schmitt trigger inverter (7414). The four logic signals (rise, fall, rise or fall, and external) are sent to a digital switch. The switch is controlled by the system microprocessor. The system microprocessor selects the logic signal that will be used as the trigger. The output of the switch is OR'd with the front-panel TRIG pushbutton. In consequence, the front-panel TRIG pushbutton can generate a trigger regardless of the selected trigger source.

As is obvious, the system microprocessor controls how a trigger will occur. Although the output of the trigger circuitry is a pulse that is sent to the system microprocessor, it is the microprocessor that enables initiation of an acquisition.

The user can specify the relationship between the trigger point and the sample window. When START is specified, a trigger initiates the window and no samples are acquired until immediately after the trigger occurs. When CENTER is specified, the trigger is centered in the sample window. CENTER is the equivalent of specifying a 50% trigger point. In either case, the recorder immediately begins sampling and stores the data in system memory. The recorder's memory acts as a circular buffer. After the last memory location is used, data is placed in the first memory location. The previous data is replaced by the newly entered data. The circular buffer can sample indefinitely. Only the most recent data samples are in memory at any given instant. After a trigger, the system collects enough additional samples to fill half the buffer. With this approach, the trigger point can be placed anywhere within the sample window to a precision of 1 %.

4-12.4 Playback

Playback of captured data can be in several formats: 8 channel, overlap, X-Y, or tabular numeric. Both the standard 8-channel format and the overlap format operate much the same as real-time recording. The difference is that, in data capture formats, min/max pairs are taken from system memory rather than from the data acquisition state machine. Playback speed is always 40 mm/s and 16 steps/millimeter. The time scale is noted in the system channel.

The DC-95 option enables the recorder to expand the time base for waveform playback. In standard playback, a new sample point is used for each step of the chart drive (16/mm). If an expansion factor of 2 is chosen, actual waveform data are printed every other step. Estimates of the waveform are used to fill the spaces between the actual samples. The estimates are derived from linear interpolation. Linear interpolation is based on the number of steps between actual samples and the value of the samples before and after the gap. This has no affect on frequency response. Frequency response depends only on how the data were acquired.

4-13 Calibration of Datalogger

The MT-9500 is able to record waveforms as a series of numerical values. This is accomplished by taking digitized data from the data acquisition electronics at a rate set by the user. This mode has a particularly useful feature. It rescales the sampled data and presents the converted data as user-defined engineering units.

The data acquisition subsystem provides the raw data as a min/max pair for the period of time since the last sample. This data has 11-bit resolution ranging from 0 to 2047. The calibration of the system is such that the center of this range (1024) corresponds to the center of the recording channel. When the waveform is adjusted to produce a flat line in the center of the grid, the min and max values supplied by the data acquisition subsystem both equal 1024.

This is significant in that a fixed relationship is established between the input voltage and the output of the A/D converter. The datalogger feature takes the value supplied by the A/D subsystem (number of steps) and scales it based on the calibration set by the operator. Scaling is based on the following equation:

$y = mx + b$ where: x = A/D value, y = scaled result, m = slope, b = offset

To specify m and b directly would require a detailed knowledge of the relationship between the A/D output and the input signal. To eliminate this requirement, the user is required to indicate the value of the input signal (in the units desired) at the left side (LS) of the grid and the value of the signal at the right side (RS) of the grid. The system then calculates m = (RS - LS) / grid width. Grid width is the number of A/D steps between the right and left sides of the grid. The value for b is found by computing the center of the chart (c) in user-defined units ([RS - LS] / 2). The value of b is given by:

$$b = 1024 - mc$$

It is important to note that the precision of the printout is limited by the resolution of the A/D converter. This cannot exceed four digits. As a consequence, calibration factors are specified as four significant digits and an exponent. Because all calculations are performed using integers, the exponent is used only to place a decimal point or to add trailing zeros.

4-14 Host Control

Host control of the MT-9500 is discussed in the MT-9500/MT-8800 Host Control Operations Manual.

Appendix A: ASC-900 Series Signal Conditioner Specifications

ASC-902 GENERAL PURPOSE SIGNAL CONDITIONER™

Measurement Range:	1 mV/division to 500 V full-scale
Maximum Input (CMV):	500 VDC or peak-to-peak AC
Attenuator:	14 steps, and OFF: 1, 2, 5, 10, 20, 50, 100 mV/division; 0.1, 0.2, 0.5, 1, 2, 5,10 V/division
Input Coupling:	AC or DC, selectable
Measurement Mode:	peak-to-peak or RMS, selectable
Common Mode Rejection:	80 dB @ 60 Hz
Input Impedance:	2 megohm differential, balanced to common, active guard
Non-Linearity:	± 0.1% full-scale
Low-pass Filtering:	-3 dB @ 10 Hz, via front panel switch
Filter Roll-off:	20 dB per octave
Zero Suppression:	0 to ±5V in the mV range, and 0 to ±500 V in the Volt range, calibrated
Calibration:	internal
Special Feature:	"Talking Signal Conditioner" feature sends all switch settings to the MT-9500, MT-8800, or Dash II for printing on the chart if the annotation feature (AP-95) is installed.

ASC-903 HIGH VOLTAGE SIGNAL CONDITIONER™

Measurement Range:	0.5 mV/division to 2000 V full-scale
Maximum Input (CMV):	2000 VDC or peak-to-peak AC
Attenuator:	16 steps and OFF: 0.5, 1, 2, 5, 10, 20, 50, 100, 200 mV/division and 0.4, 1, 2,4, 10, 20, 40 V/division
Input Coupling:	DC
Measurement Mode:	peak-to-peak
Common Mode Rejection:	110 dB @ DC
Input Impedance:	200 MΩ differential, isolated (1 MΩ in the mV range)
Non-Linearity:	±0.1% full-scale
Low-pass Filtering:	-3 dB @ 5 Hz or 40 Hz, via front panel switch
Filter Roll-off:	20 dB per octave
Zero Suppression:	maximum 1000% of full-scale (2000 V max.), calibrated
Isolation:	includes optically-coupled isolation module
Special Feature:	"Talking Signal Conditioner" feature sends all switch settings to the MT-9500, MT-8800, or Dash II for printing on the chart if the annotation feature (AP-95) is installed.

ASC-906 DC BRIDGE AMP SIGNAL CONDITIONER™

Measurement Range:	20 µV/division to 5 V full-scale
Maximum Input (CMV):	10 VDC or peak-to-peak AC
Attenuator:	12 steps: 20, 50, 100, 200, 500, 1000 µV/division; 2, 5, 10, 20, 50, 100 mV/division
Input Coupling:	DC
Measurement Mode:	peak-to-peak
Common Mode Rejection:	90 dB @ 60 Hz
Input Impedance:	6 megohm differential, active guard
Non-Linearity:	±0.1% full-scale
Low-pass Filtering:	-3dB @ 5 Hz or 40 Hz, via front panel switch
Filter Roll-off:	20 dB per octave
Excitation:	0 to 10 VDC adjustable
Zero Suppression:	0 to ± 0.5 V in the µV range and 0 to ±50 V in the mV range, calibrated
Calibration:	bridge completion socket and external balance control
Special Feature:	"Talking Signal Conditioner" feature sends all switch settings to the MT-9500, MT-8800, or Dash II for printing on the chart if the annotation feature (AP-95) is installed.

ASC-908 HIGH GAIN SIGNAL CONDITIONER™

Measurement Range:	1 μV/division to 5 V full-scale
Maximum Input (CMV):	10 VDC or peak-to-peak AC
Attenuator:	16 steps and OFF: 1, 2, 4, 10, 20, 40,100, 200 μV/division; 0.5, 1, 2, 5, 10, 20, 50, 100 mV/division
Input Coupling:	DC
Measurement Mode:	peak-to-peak
Common Mode Rejection:	110 dB @ 60 Hz
Input Impedance:	6 megohm differential, active guard
Non-Linearity:	± 0.1% full-scale
Low-pass Filtering:	-3 dB @ 5 Hz or 40 Hz, via front panel switch
Filter Roll-off:	20 dB per octave
Zero Suppression:	0 to ±5 V, calibrated
Calibration:	internal
Special Feature:	"Talking Signal Conditioner" feature sends all switch settings to the MT-9500, MT-8800, or Dash II for printing on the chart if the annotation feature (AP-95) is installed.

NOTE: 1, 2 & 4 μV attenuator ranges require a filter.

ASC-909 MEDIUM-HIGH GAIN SIGNAL CONDITIONER™

Measurement Range:	0.1 mV/division to 50 V full-scale
Maximum Input (CMV):	100 VDC or peak-to-peak AC
Attenuator:	14 steps and OFF: 0.1, 0.2, 0.5, 1, 2, 5, 10 mV/division; 0.01, 0.02, 0.05, 0.1, 0.2, 0.5, 1 V/division
Input Coupling:	DC
Measurement Mode:	peak-to-peak
Common Mode Rejection:	80 dB @ 60 Hz
Input Impedance:	2 megohm differential, balanced to common, active guard
Non-Linearity:	±0.1% full-scale
Low-pass Filtering:	-3 dB @ 10 Hz, via front panel switch
Filter Roll-off:	20dB per octave
Zero Suppression:	0 to ±0.5 V in the mV range, and 0 to ± 50 V in the Volt range, calibrated
Calibration:	internal
Special Feature:	"Talking Signal Conditioner" feature sends all switch settings to the MT-9500, MT-8800, or Dash II for printing on the chart if the annotation feature (AP-95) is installed.

ASC-910J THERMOCOUPLE SIGNAL CONDITIONER™

Measurement Range:	0 to 600 °C 0 to 1112 °F
Maximum Input:	750 °C 1382 °F
Selector:	6 steps and OFF: 1, 2, 4, 10, 20, 40 deg/div (°C and °F)
Resolution:	1 deg/division in all ranges
Measurement Mode:	°C or °F, selectable
Input:	Front panel probe input
Non-Linearity:	±1 deg
Zero Suppression:	-200 to +1000 deg (°C or °F)
Calibration:	internal
Special Feature:	"Talking Signal Conditioner" feature sends all switch settings to the MT-9500, MT-8800, or Dash II for printing on the chart if the annotation feature (AP-95) is installed.

NOTE: Includes standard thermocouple probe.

ASC-910K THERMOCOUPLE SIGNAL CONDITIONER™

Measurement Range:	0 to 1000 °C 0 to 1832 °F
Maximum Input:	1250 °C 2282 °F
Selector:	6 steps and OFF: 1, 2, 4, 10, 20, 40 deg/div (°C and °F)
Resolution:	1 deg/division in all ranges
Measurement Mode:	°C or °F, selectable
Input:	front panel probe input
Non-Linearity:	±1 deg
Zero Suppression:	-200 to +1000 deg (°C or °F)
Calibration:	internal
Special Feature:	"Talking Signal Conditioner" feature sends all switch settings to the MT-9500, MT-8800, or Dash II for printing on the chart if the annotation feature (AP-95) is installed.

NOTE: Includes standard thermocouple probe

ASC-912 FREQUENCY TO VOLTAGE SIGNAL CONDITIONER™

Measurement Range:	20 Hz to 5 megHz full-scale
Maximum Input (CMV):	8 VDC or peak-to-peak AC
Attenuator:	18 steps and OFF: 0.02, 0.05, 0.1, 0.2, 0.5, 1, 2, 5, 10 kHz and mHz, full-scale
Input Coupling:	DC
Input Impedance:	100 Kohm single-ended to floating common
Non-Linearity:	+/- 0.25% full-scale
Zero Suppression:	0 to 2000% of full-scale
Calibration:	internal
Special Features:	microprocessor controlled; resolution down to 1 Hz

NOTES: 1. Minimum input = 1 V
2. Status reporting feature is not available

ASC-913 LOGARITHMIC TO DC SIGNAL CONDITIONER™

Measurement Range:	-70 dB to +20 dB
Maximum Input:	10 VDC or peak-to-peak AC
Selector:	5 steps and OFF (each range equals 50 dB full-scale), baseline equals: -70, -60, -50, -40, -30 dB
Resolution:	1 dB/division in all ranges
Reference:	0 dB = 1 V
Input Coupling:	AC or DC, selectable
Measurement Mode:	peak-to-peak or RMS, selectable
Other Modes:	dBV is standard, dBm by special order
Input Impedance:	8 MΩ single-ended, floating to common
Non-Linearity:	+/- 0.5% dB
Calibration:	-30dB CAL button (0.0316 V)
Special Feature:	"Talking Signal Conditioner" feature sends all switch settings to the MT-9500, MT-8800, or Dash II for printing on the chart if the annotation feature (AP-95) is installed.

NOTE: input range equals 316 μV to 10 V

Appendix B: Commonly Ordered Spare Parts

Nomenclature	Part Number
CHASSIS	41215-000 41285-000*
Printhead Assembly	31428-000
Printhead Pressure Springs	10475-004 (6)
Printhead Assembly Pressure Bracket:	
with lights	31390-000
without lights (bar only)	41127-002
bulbs	12016-001
Printhead Lift arms	22600-001
Sensors for TOF and INTLK	11170-001
POWER SUPPLIES	
24 VDC, Slave (right side)	31374-070
24 VDC, Master (left side)	31374-071
5 VDC/12 VDC	
5V @ 8A / +12V @ 1.7A /	
-12V @ 1.7A with connector	31374-010
24 VDC (for 200 mm/s only)	30974-212
24 VDC to 5 VDC PCB	22149-001
±12 + 24 + 5V (MUXOUT)	31374-100*
24V @ 11A	31374-200*
PRINTED CIRCUIT BOARDS	
Slave Assembly Controller (right)	41205-006
Master Assembly Controller (left)	41205-005
Master Assembly	
(left, 200 mm/s)	41205-025
Stepper Motor Ramp Board	
Assembly	41530-001

*All entries with an asterisk (*) indicate a Phase II MT-9500.
If your recorder has a software configuration number (SCN) beginning with the number 2, it is a Phase II recorder.

Nomenclature	Part Number
PRINTED CIRCUIT BOARDS (continued)	
Master Engine 1 (left)	41630-001* (1)
Slave Engine 2 (right)	41630-002* (1)
I/O PCB Assembly Complete (41211-X)	22494-000
CPU PCB Assembly Complete (41209-2)	22493-023
A/D PCB Assembly Complete (41210-X)	22495-000
BNC Panel Assembly Complete	22492-000
Mother Board Assembly	31309-001
High Torque Stepper Motor Driver Assembly	31220-201
Stepper Motor Driver Board Assembly (100 mm/s)	31220-759
Microstep Motor Controller	41626-001*
FRONT PANEL ASSEMBLY	41227-000
	41227-050*
Keyboard Display Assembly	41220-001
Potentiometer Board Assembly	31324-001
Knobs	22490-002
Caps	22490-010
White Rivet (for WT-95 holes)	22744-020
Power Rocker Switch	22481-000
	21438-100*
Front Panel	41222-102
	41222-122*
Front Panel Overlay	41223-002
	41223-052*
REAR PANEL ASSEMBLY	41228-000
	41286-000
Fan with connector Assembly	22288-001
Screen for fan	22499-002
Filter for fan	22499-003
Fan Bracket	22499-006
Fan Guard Finger	23015-010*
Fan Parts	23014-010*
Fan	23015-000* (1)
Fan	23014-000* (2)

Nomenclature	Part Number
SOFTWARE	
E-Prom U3 (I/O Board)	71004-600
E-Prom U10 (CPU Board)	71004-601
E-Prom U11 (CPU Board)	71004-602
E-Prom U12 (Slave)	71004-605
E-Prom U13 (Slave)	71004-606
E-Prom U10 (Slave)	71004-607
E-Prom U11 (Slave)	71004-608
E-Prom U10 (Master)	71004-603
E-Prom U11 (Master)	71004-604
E-Prom U12 (Master)	71004-605
E-Prom U13 (Master)	71004-606
E-Prom Prog MT95 500 mm/s I/O U3	71004640*
E-Prom Prog MT95 500 mm/s CPU U10	71004641*
E-Prom Prog MT95 500 mm/s CPU 11	71004642*
E-Prom Prog MT95 500 mm/s EN1 U11	71004643*
E-Prom Prog MT95 500 mm/s EN1 U10	71004544*
E-Prom Prog MT95 500 mm/s EN2 U11	71004645*
E-Prom Prog MT95 500 mm/s EN2 U10	71004646*
E-Prom Prog MT95 500 mm/s MTR U8	71004647*
E-Prom Prog MT95 500 mm/s MTR U3	71004648*
MISCELLANEOUS	
Stepper Motor (6 volts)	21881-102 21881-300*
36T Pulley with clutch	20525-036
Timing Belt	20391-102
Static Brush	22510-000
Brush Mount	22509-002
Motion Detector Assembly Harness	22838-002
A/C Grounded Power Cord (78")	21464-001
A/C Power Cord Card Cage to MT (3')	22567-000
Top Cover	31330-001
Flywheel	31478-001
Rack Kit	41117-950
Connector Kit	89050-009
Fuses 6.0 amp	10363-600*
3.15 amp	10365-315*

Nomenclature	Part Number
MANUALS	
Quick Start Guide	12834-095
MT-9500 Maintenance and Service	22834-091
MT-9500 Operations	22834-095
MT-9500 Host Control Operations	22834-089
PAPER / SHIP WITH	
Thermal Z-Fold Black Trace (500 sheets)	40985-979
Thermal Roll Black Trace (500 ft)	40985-000
25 Pin D-shell	10907-125
15 Pin D-shell	10909-115

Appendix C: Schematics and Drawings

NEXT ASSY	USED ON
APPLICATION	

REVISIONS — SIZE C

CHG LTR	DESCRIPTION	DSN BY & DATE	PRG BY & DATE
A	ISSUED	DF 6.2.87	
B	ADD NOTES 2–4. OPEN DOOR DIM. ECR 14224		DK 12/24/87

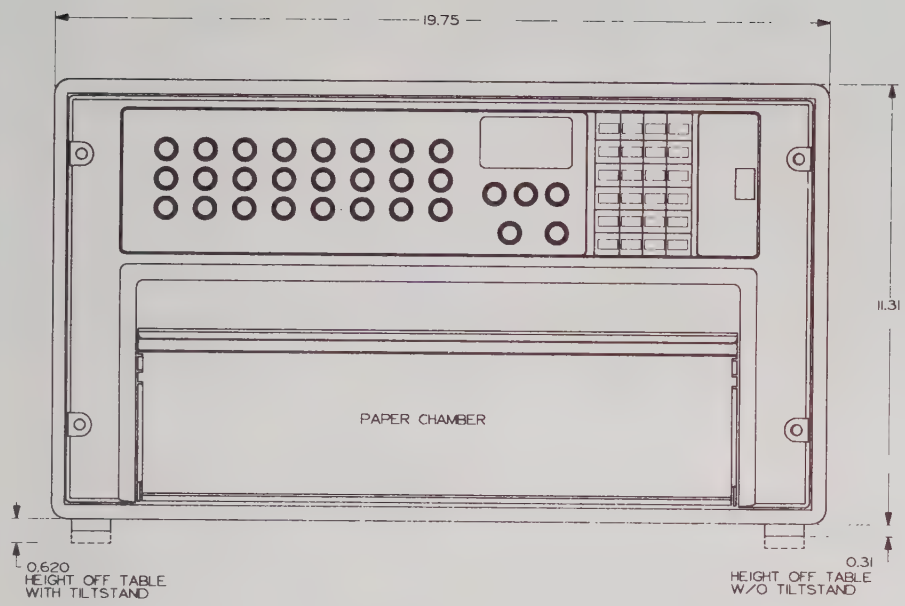

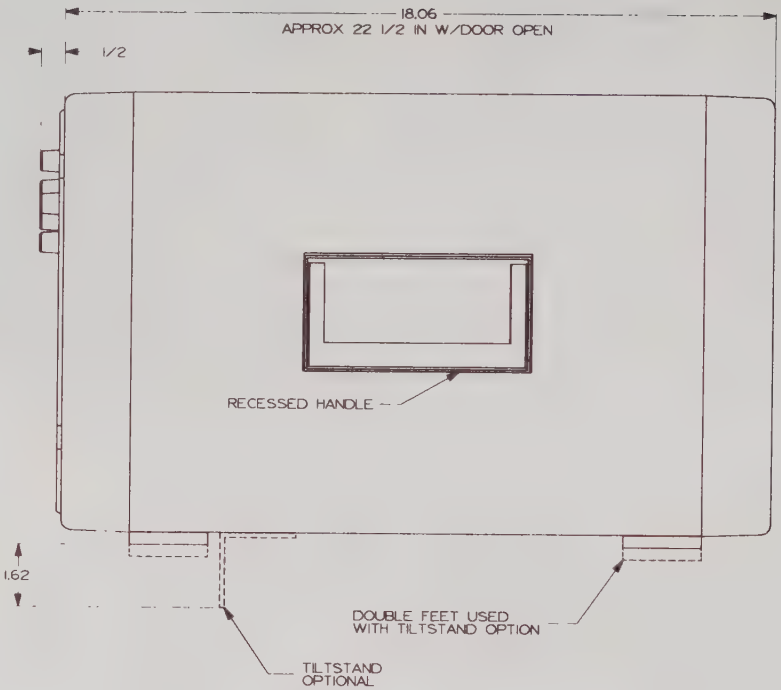

NOTES:

1. ALL DIMENSIONS ARE REFERENCE ONLY.
2. CARRYING CASE (LESS TILT STAND) ASTRO–MED P/N 31224–206 (EXTERNAL DIMENSIONS 24IN X 21IN X 15IN) TOTAL WEIGHT 95LBS.
3. OUTLINE DWG. MT9500 W/WRITING TABLE #41229–026.
4. OUTLINE DWG. MT9500 W/RACK MOUNT #41229–X.

UNLESS OTHERWISE SPECIFIED	SIGNATURES	DATE
DIMENSIONS ARE IN INCHES	DWN DF	6.2.87
TOLERANCES ON FRACTIONS DECIMALS ANGLES ±1/64 ±.005 ±0° 30'	CHK	11/24/87
ALL SURFACES 63 REMOVE BURRS AND SHARP EDGES	ENG	
	MFG	
MATL–	APP	11 24 87
	ISSUED RC 11/25/87	
FINISH	SIMILAR TO	

Astro–Med, Inc.
600 East Greenwich Ave.
West Warwick RI 02893 (401–828–4000)

OUTLINE DIMENSIONS

MT9500 IN BENCH TOP CABINET

SIZE	CODE IDENT NO.		REV
C		31910–000	B
SCALE		SHEET 1 CONT ON SHEET F	

C-1

4 3 2 1

C-2

NEXT ASSY	USED ON
-	-
41269-010	MT SERIES

REVISIONS

REV	DESCRIPTION	DRN BY DATE	APP BY DATE
A	NEW. TAKEN FROM -100 REV D		
B	BLK GND WAS TO PIN 10 ECR 14512	JA 2/2/88	
C	REDRAW ON CAD. N/C ECR 14719	DK 3/30/88	
D	R1 MOVED TO LED SIDE OF CON ECR 14868	MSV 9-9-88	

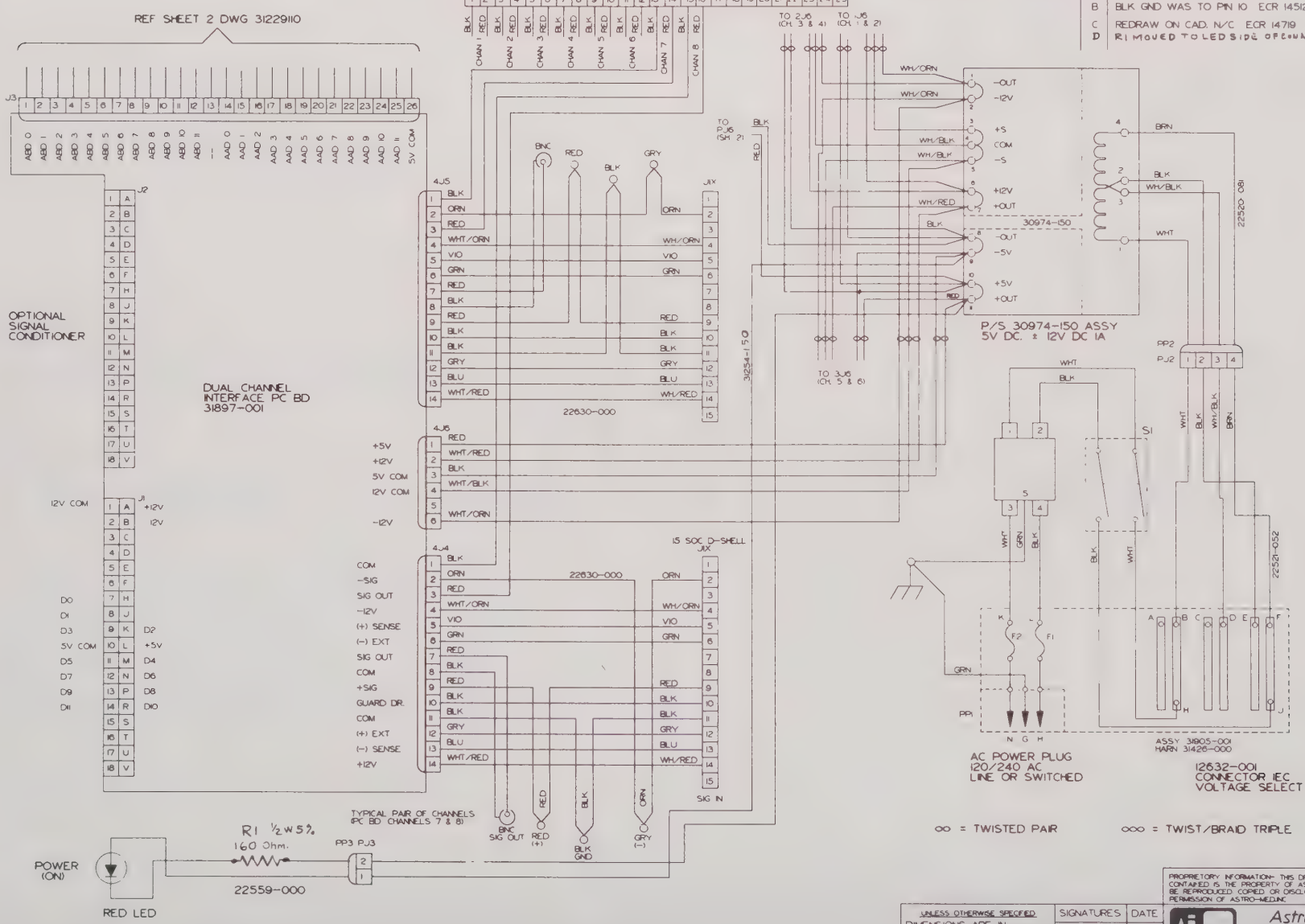

PROPRIETORY INFORMATION: THIS DRAWING AND ALL THE INFORMATION CONTAINED IS THE PROPERTY OF ASTRO-MED,INC. AND SHALL NOT BE REPRODUCED COPIED OR DISCLOSED WITHOUT THE WRITTEN PERMISSION OF ASTRO-MED,INC.

UNLESS OTHERWISE SPECIFIED
DIMENSIONS ARE IN
TOLERANCES ON
FRACTIONS DECIMALS ANGLES
ALL SURFACES 63
REMOVE BURRS AND SHARP EDGES
MAT'L
FINISH

SIGNATURES	DATE
DWN ASV	11/13/87
CHK	
ENG	
MFG DG	11/30/87
APP	
ISSUED RC	12/2/87
SIMILAR TO	

Astro-Med Inc.
600 East Greenwich Ave
West Warwick, RI 02893 (401-828-4000)

SCHEMATIC C950/C950R
FOR MT SERIES W/STATUS

SIZE	CODE IDENT NO		REV
C	-	31229110	L

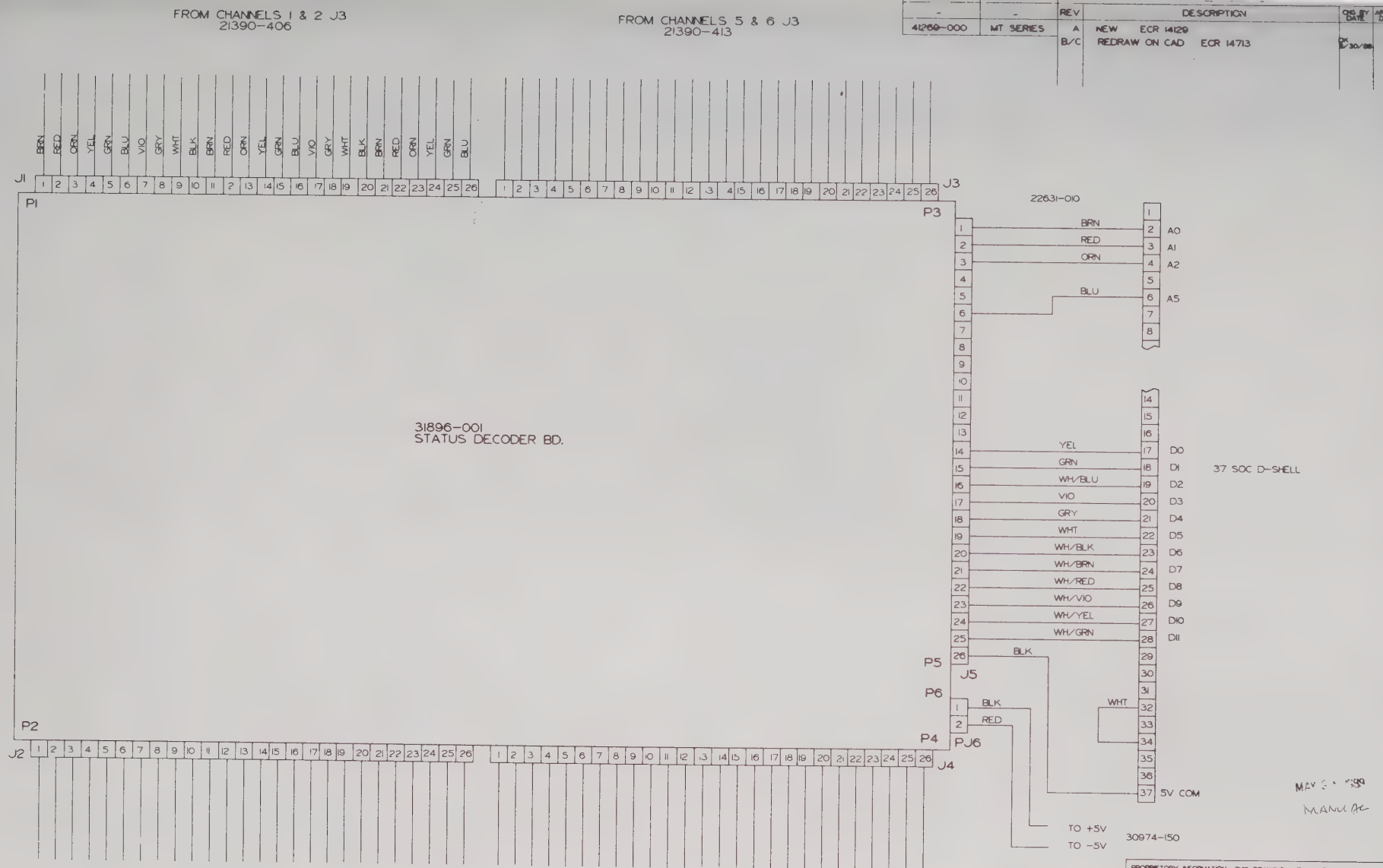

PROPRIETORY INFORMATION- THIS DRAWING AND ALL THE INFORMATION CONTAINED IS THE PROPERTY OF ASTRO-MED,INC. AND SHALL NOT BE REPRODUCED COPIED OR DISCLOSED WITHOUT THE WRITTEN PERMISSION OF ASTRO-MED,INC

UNLESS OTHERWISE SPECIFIED
DIMENSIONS ARE IN
TOLERANCES ON
FRACTIONS DECIMALS ANGLES
ALL SURFACES 63
REMOVE BURRS AND SHARP EDGES
MAT'L –
FINISH –

SIGNATURES	DATE
DWN ASV	11/16/87
CHK	–
ENG	–
MFG	–
APP DG	11/30/87
ISSUED RC	12/2/87
SIMILAR TO	–

Astro-Med, Inc.
600 East Greenwich Ave.
West Warwick, RI 02893 (401-828-4000)

SCHEMATIC C950/950R

FOR MT SERIES W/STATUS

SIZE	CODE IDENT NO.		REV
C	–	31229110	C
SCALE –		SHEET 2 OF F	

C-3

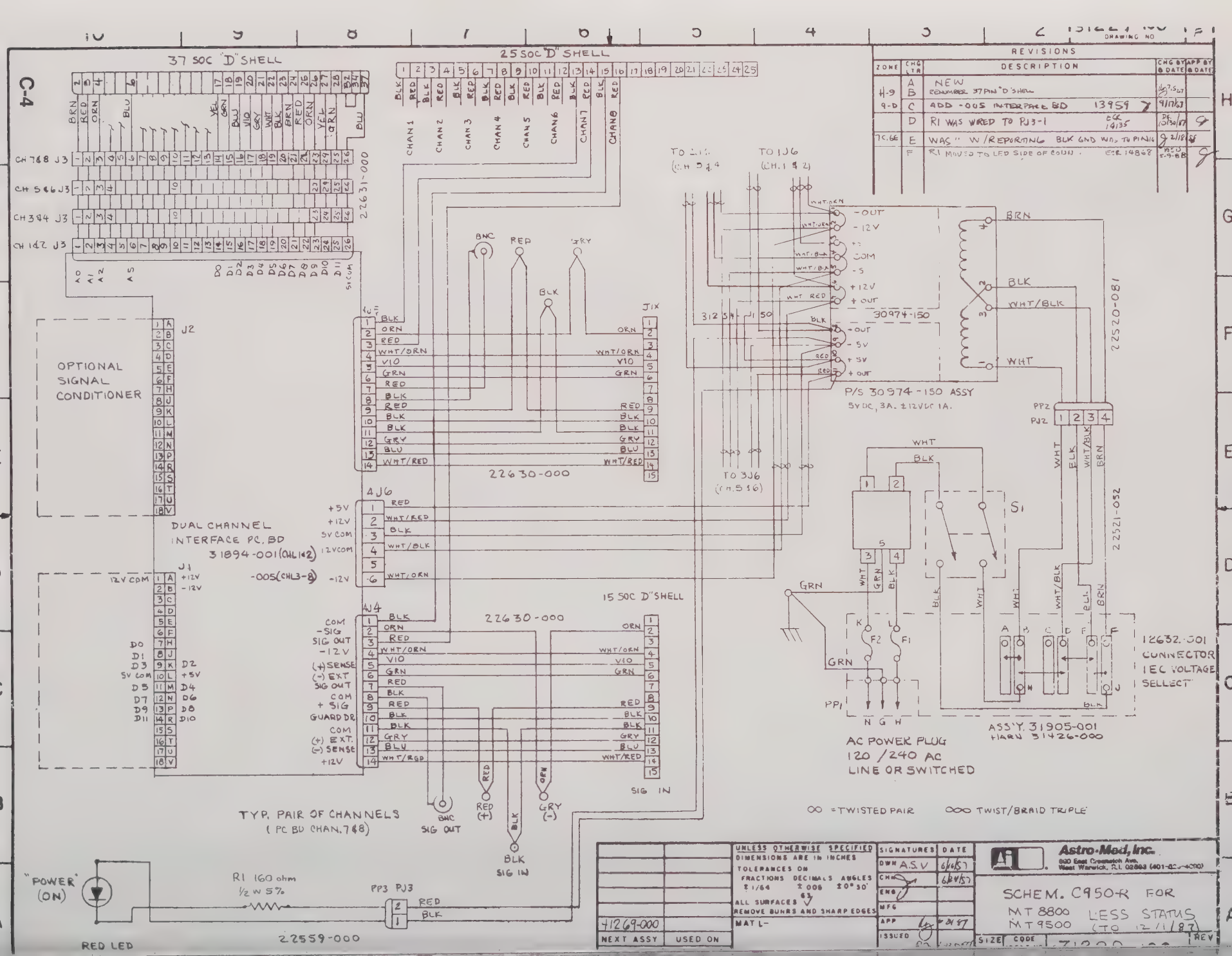
37 SOC "D" SHELL
25 SOC "D" SHELL
REVISIONS
ZONE
CHG LTR
DESCRIPTION
CHG BY & DATE
APP BY & DATE
NEW
RENUMBER 37 PIN "D" SHELL
ADD -005 INTERFACE BD 13959
RI WAS WIRED TO PJ3-1
WAS " W/REPORTING BLK GND WAS TO PIN 16
RI MOVED TO LED SIDE OF BOARD. ECR 14868
22631-000
22630-000
OPTIONAL SIGNAL CONDITIONER
DUAL CHANNEL INTERFACE PC. BD 31894-001 (CHL 1&2) -005 (CHL 3-8)
15 SOC D" SHELL
TYP. PAIR OF CHANNELS (PC BD CHAN. 7&8)
TO 2J4 (CH. 3 & 4)
TO 1J6 (CH. 1 & 2)
TO 3J6 (CH. 5 & 6)
P/S 30974-150 ASSY
5VDC, 3A. ±12VDC 1A.
30974-150
22520-081
22521-052
12632-001 CONNECTOR IEC VOLTAGE SELLECT
AC POWER PLUG 120/240 AC LINE OR SWITCHED
ASS'Y. 31905-001 HARN 31426-000
"POWER" (ON)
R1 160 ohm ½ W 5%
RED LED
22559-000
SIG IN
SIG OUT
∞ = TWISTED PAIR
∞∞ TWIST/BRAID TRIPLE
UNLESS OTHERWISE SPECIFIED DIMENSIONS ARE IN INCHES
TOLERANCES ON FRACTIONS DECIMALS ANGLES ±1/64 ±.005 ±0°30'
ALL SURFACES 63
REMOVE BURRS AND SHARP EDGES
MAT'L-
SIGNATURES
DATE
DWN A.S.V 6/6/87
CHK 6/6/87
ENG
MFG
APP
ISSUED
41269-000
NEXT ASSY
USED ON
Astro-Med, Inc.
600 East Greenwich Ave, West Warwick, R.I. 02893 (401-828-4000)
SCHEM. C950-R FOR MT 8800 MT 9500 LESS STATUS (TO 12/1/87)
SIZE
CODE
71200
REV

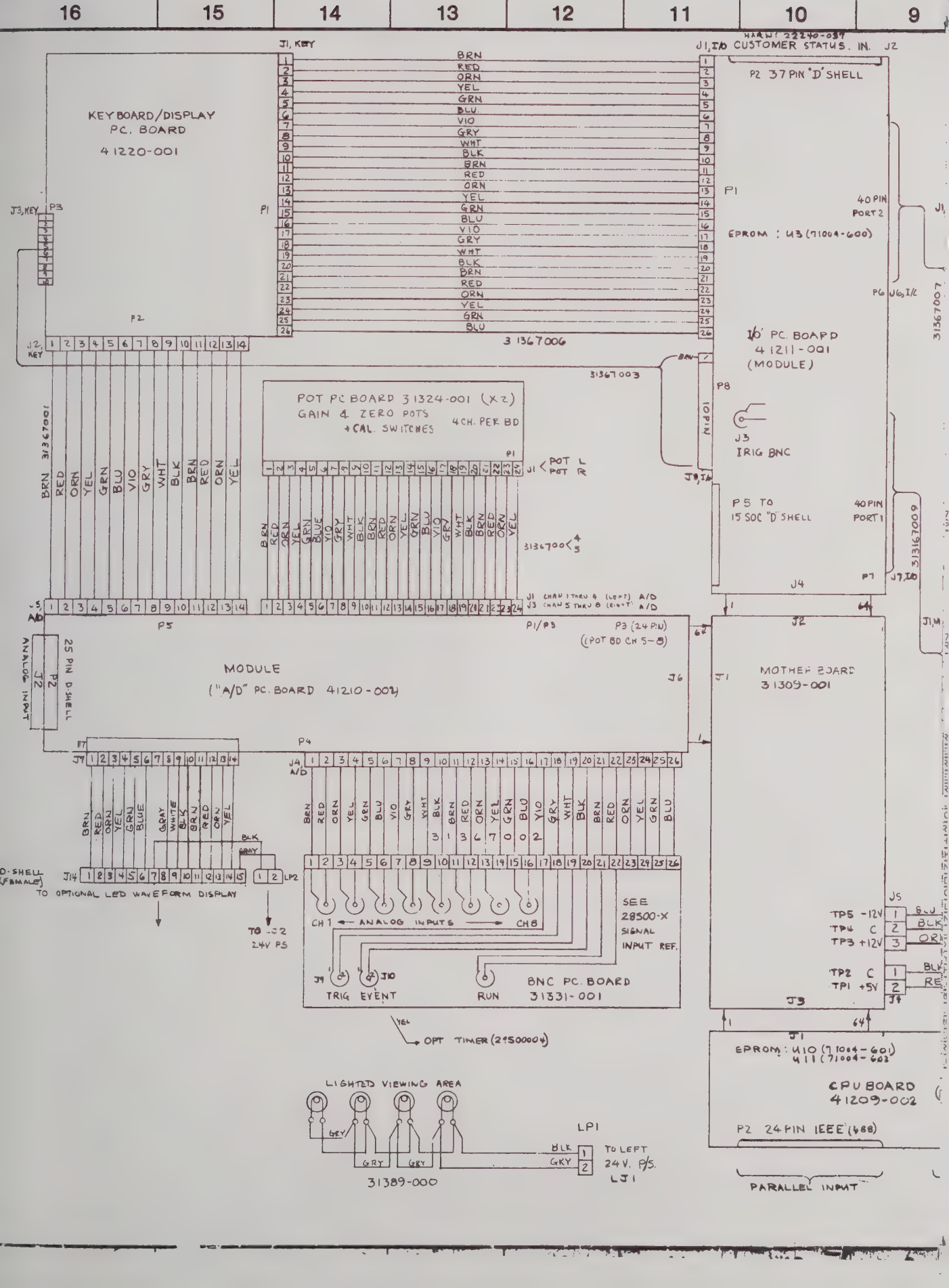
16
15
14
13
12
11
10
9
KEYBOARD/DISPLAY
PC. BOARD
41220-001
J1, KEY
J1, I/O CUSTOMER STATUS. IN. J2
HARN: 22240-037
P2 37 PIN "D" SHELL
P1
40 PIN
PORT 2
EPROM : U3 (71004-600)
P6 J6, I/C
31367007
31367006
J3, KEY P3
P2
J2, KEY
31367003
I/O PC. BOARD
41211-001
(MODULE)
P8
10 PIN
J3
IRIG BNC
J8, I/O
P5 TO
15 SOC "D" SHELL
40 PIN
PORT 1
31367009
J4
P7
J7, I/O
POT PC BOARD 31324-001 (X2)
GAIN & ZERO POTS
+CAL. SWITCHES
4 CH. PER BD
J1 POT L
POT R
31367001
31367004
J1 CHAN 1 THRU 4 (LEFT) A/D
J3 CHAN 5 THRU 8 (RIGHT) A/D
J5, A/D
P5
P1/P3
P3 (24 PIN)
(POT BD CH 5-8)
J2
J1, M
MODULE
("A/D" PC. BOARD 41210-002)
J6
J1
MOTHER BOARD
31309-001
ANALOG INPUT
25 PIN D-SHELL
P2
J2
P4
J7
J4, A/D
31367002
D-SHELL (FEMALE)
J14
TO OPTIONAL LED WAVEFORM DISPLAY
LP2
TO J2
24V PS
CH 1 ← ANALOG INPUTS → CH 8
SEE
28500-X
SIGNAL
INPUT REF.
J9
J10
TRIG
EVENT
RUN
BNC PC. BOARD
31331-001
OPT TIMER (29500004)
J5
TP5 -12V
TP4 C
TP3 +12V
TP2 C
TP1 +5V
J3
J1
EPROM: U10 (71004-601)
U11 (71004-602)
CPU BOARD
41209-002
P2 24 PIN IEEE (488)
PARALLEL INPUT
LIGHTED VIEWING AREA
LP1
TO LEFT
24 V. P/S.
LJ1
31389-000

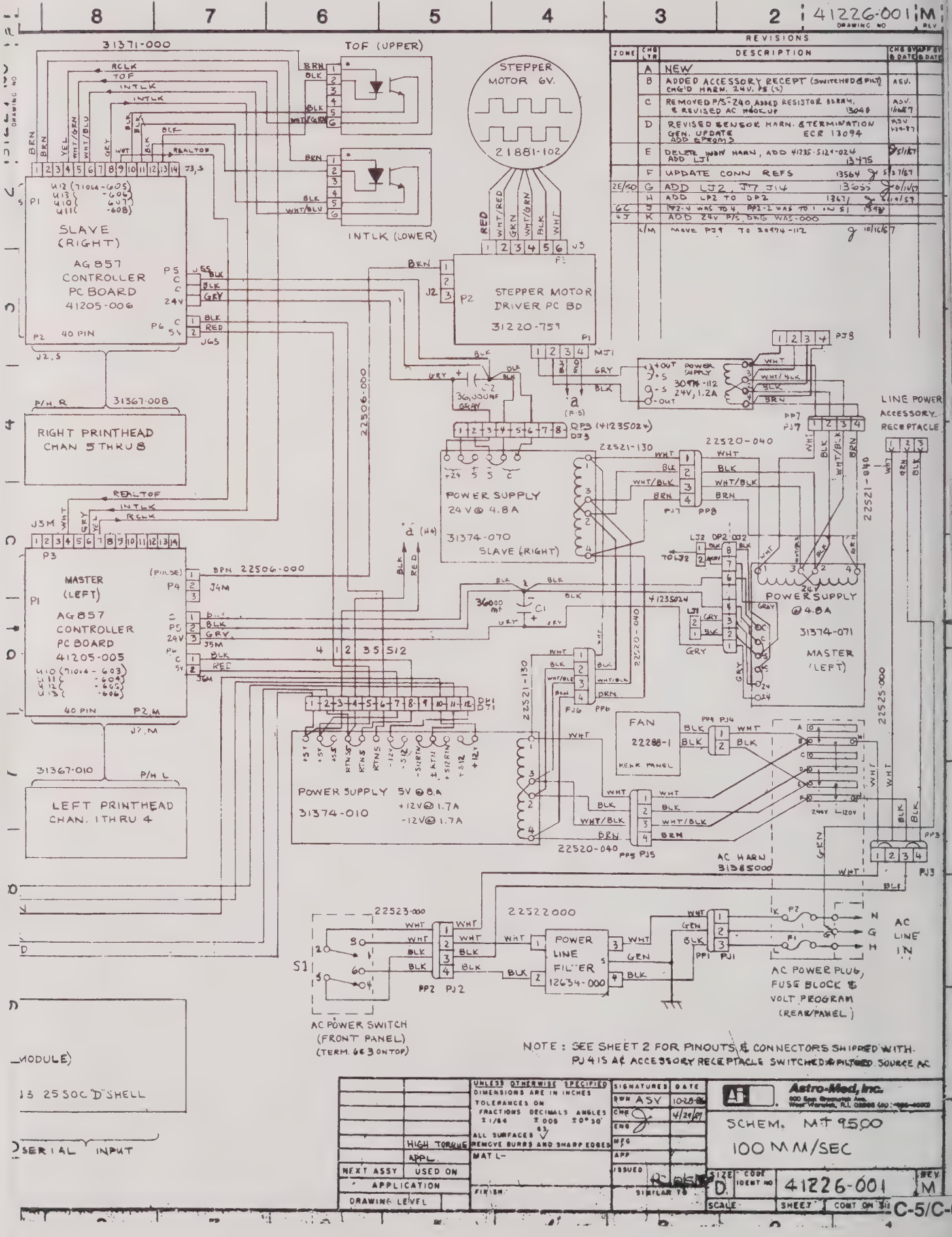

41226-001 M
DRAWING NO
REV
REVISIONS
ZONE | CHG LTR | DESCRIPTION | CHG BY & DATE | APP BY & DATE
A NEW
B ADDED ACCESSORY RECEPT (SWITCHED & FILT) CHG'D HARN. 24V, PS (2) ASV.
C REMOVED P/S-240, ADDED RESISTOR BERM, & REVISED AC HOOK UP 13048 ASV. 1/16/87
D REVISED SENSOR HARN. & TERMINATION GEN. UPDATE ECR 13094 ADD EPROMS ASV 1-29-87
E DELETE INDIV HARN, ADD 41235-5124-024 ADD LJ1 13475 5/1/87
F UPDATE CONN REFS 13564 5/3/87
2E/ISD G ADD LJ2, J7 J14 13655 10/16/87
H ADD LP2 TO DP2 13671 10/1/87
6C J PP2-4 WAS TO 4, PP2-2 WAS TO 1 ON S1 13938
4J K ADD 24V P/S, DWG WAS-000
L/M MOVE PJ9 TO 30974-112 10/16/87
31371-000
TOF (UPPER)
INTLK (LOWER)
STEPPER MOTOR 6V.
21881-102
SLAVE (RIGHT)
AG857 CONTROLLER PC BOARD 41205-006
40 PIN
STEPPER MOTOR DRIVER PC BD
31220-759
RIGHT PRINTHEAD CHAN 5 THRU 8
31367-008
POWER SUPPLY 24V @ 4.8A
31374-070
SLAVE (RIGHT)
POWER SUPPLY 30974-112 24V, 1.2A
LINE POWER ACCESSORY RECEPTACLE
22520-040
22521-130
22506-000
22521-040
MASTER (LEFT)
AG857 CONTROLLER PC BOARD 41205-005
40 PIN
POWER SUPPLY @ 4.8A
31374-071
MASTER (LEFT)
FAN 22288-1
REAR PANEL
POWER SUPPLY 5V @ 8.A
+12V @ 1.7A
-12V @ 1.7A
31374-010
22525-000
AC HARN 31385000
31367-010
LEFT PRINTHEAD CHAN. 1 THRU 4
22523-000
22522000
POWER LINE FILTER 12634-000
AC POWER SWITCH (FRONT PANEL) (TERM. 6 & 3 ON TOP)
AC POWER PLUG, FUSE BLOCK & VOLT PROGRAM (REAR PANEL)
AC LINE IN
MODULE)
13 25 SOC "D" SHELL
SERIAL INPUT
NOTE: SEE SHEET 2 FOR PINOUTS & CONNECTORS SHIPPED WITH PJ 415 AC ACCESSORY RECEPTACLE SWITCHED & FILTERED SOURCE AC
UNLESS OTHERWISE SPECIFIED DIMENSIONS ARE IN INCHES
TOLERANCES ON FRACTIONS DECIMALS ANGLES ±1/64 ±.005 ±0°30'
ALL SURFACES 63
REMOVE BURRS AND SHARP EDGES
MAT L-
FINISH
SIGNATURES DATE
DWN ASV 10-28-86
CHK 4/29/87
ENG
MFG
APP
ISSUED
SIMILAR TO
HIGH TORQUE
APPL.
NEXT ASSY USED ON
APPLICATION
DRAWING LEVEL
Astro-Med, Inc.
SCHEM. MT 9500
100 MM/SEC
SIZE D CODE IDENT NO 41226-001 REV M
SCALE SHEET CONT ON SH
C-5/C-6

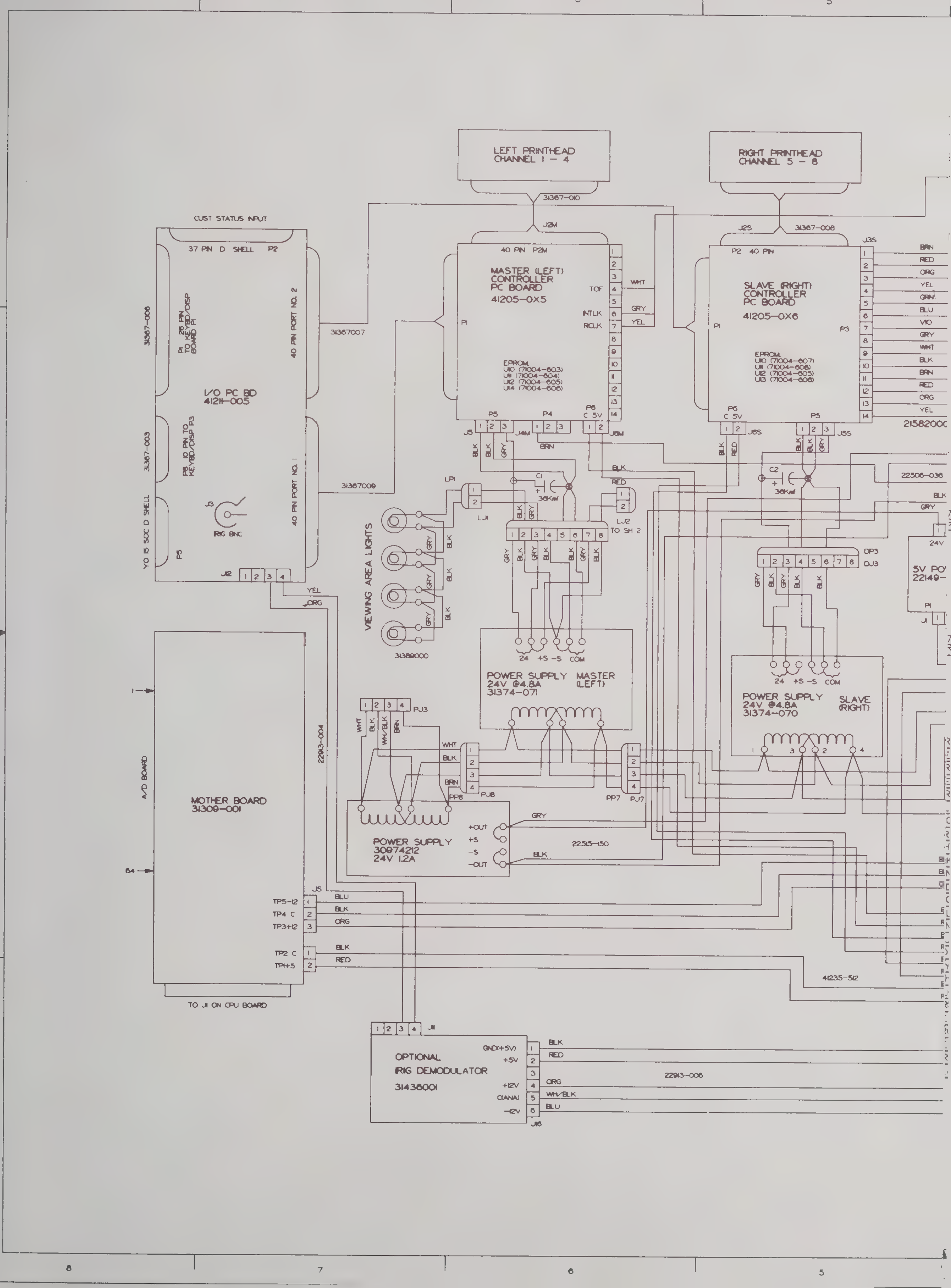
LEFT PRINTHEAD CHANNEL 1 – 4
RIGHT PRINTHEAD CHANNEL 5 – 8
31367-010
31367-008
CUST STATUS INPUT
37 PIN D SHELL P2
I/O PC BD 41211-005
P1 26 PIN TO KEYBD/DISP BOARD P1
P3 10 PIN TO KEYBD/DISP P3
40 PIN PORT NO. 2
40 PIN PORT NO. 1
YO 15 SOC D SHELL
IRIG BNC
31367007
31367009
MASTER (LEFT) CONTROLLER PC BOARD 41205-0X5
40 PIN P2M
TOF
INTLK
RCLK
EPROM U10 (71004-603) U11 (71004-604) U12 (71004-605) U14 (71004-606)
SLAVE (RIGHT) CONTROLLER PC BOARD 41205-0X6
P2 40 PIN
EPROM U10 (71004-607) U11 (71004-608) U12 (71004-605) U13 (71004-606)
21582000
22506-036
VIEWING AREA LIGHTS
31389000
TO SH 2
5V POW 22149-
POWER SUPPLY MASTER (LEFT) 24V @4.8A 31374-071
POWER SUPPLY SLAVE (RIGHT) 24V @4.8A 31374-070
24 +S -S COM
POWER SUPPLY 30974212 24V 1.2A
+OUT +S -S -OUT
22515-150
22913-004
A/D BOARD
MOTHER BOARD 31309-001
TP5-12 TP4 C TP3+12 TP2 C TP1+5
TO J1 ON CPU BOARD
41235-512
OPTIONAL IRIG DEMODULATOR 31436001
GND(+5V) +5V +12V C(ANA) -12V
22913-006
8
7
6
5

NEXT ASSY	USED ON	REVISIONS			
-	-	REV	DESCRIPTION	CHK BY DATE	APP BY DATE
-	-	C	14521, 4499		

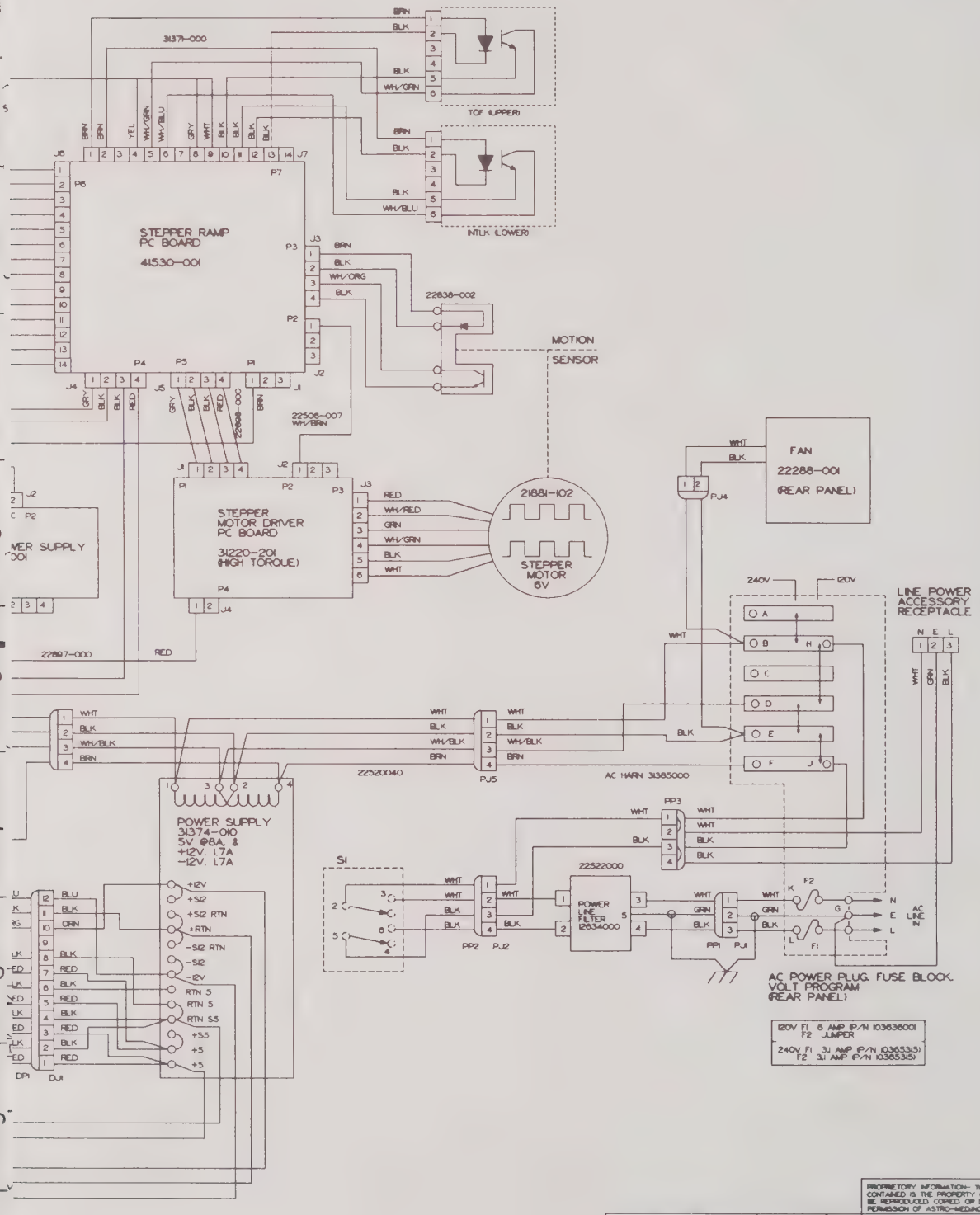

PROPRIETARY INFORMATION- THIS DRAWING AND ALL THE INFORMATION CONTAINED IS THE PROPERTY OF ASTRO-MED,INC. AND SHALL NOT BE REPRODUCED, COPIED, OR DISCLOSED WITHOUT THE WRITTEN PERMISSION OF ASTRO-MED,INC.

UNLESS OTHERWISE SPECIFIED
DIMENSIONS ARE IN -
TOLERANCES ON
FRACTIONS DECIMALS ANGLES
ALL SURFACES 63
REMOVE BURRS AND SHARP EDGES

SIGNATURES		DATE
DWN	DK	2/1/88
CHK	JA	12/17/87
ENG	-	-
MFG	-	-
APP	DG	1/13/88
ISSUED	RC	1/13/88

MAT'L -
FINISH -
SIMILAR TO -

Astro-Med Inc.
600 East Greenwich Ave.
West Warwick, R.I. 02893 (401-828-4000)

SCHEMATIC
200MM/SEC MT9500

SIZE	CODE IDENT NO.		REV
D		41226-200	C
SCALE NONE		SHEET 1 OF 2	

CONNECTOR PIN OUTS. FLAT CABLE

LOC	COLOR	CONT PORT 40 PIN TO I/O BD.	CONTROL 40 PIN TO P/H TYP	KEYBD 28 PIN TO I/O BD.	POT BD. 24 PIN TO A/D BD.	KEYBD. 14 PIN TO A/D BD.	KEYBD. 10 PIN TO I/O BD.
1	BRN	COM	24V	DIGIT 1	GND	+V	CX4
2	RED	/AGRESET	H GND	2	ACAL	–	CX3
3	ORG	PA0	24V	3	S1	–V	CX2
4	YEL	PA1	H GND	4	GND	TRIG MAN	CX1
5	GRN	PA2	24V	5	BCAL	GND	RY1
6	BLU	PA3	H GND	6	S2	TA	RY2
7	VIO	PA4	24V	7	GND	TB	RY3
8	GRY	PA5	H GND	8	CCAL	TC	RY4
9	WHT	PA6	24V	SEG A	S3	–	RY5
10	BLK	PA7	HGND	B	GND	+5V	RY6
11	BRN	–	5V	C	DCAL	/LED	31367003
12	RED	–	H GND	D	S4	/LABEL	
13	ORG	ARDY	H LATCH	E	GND	/MAN EVENT	
14	YEL	BRDY	H GND	F	GND	–	
15	GRN	PGM TEST	HCLK 0	G	A ZERO	31367001	
16	BLU	TOF	H GND	SEG DP	GND		
17	VIO	INTLK	NHD 0	CX4	B ZERO		
18	GRY	+5	H GND	CX3	GND		
19	WHT	/ARDY	–	CX2	C ZERO		
20	BLK	/ASTB	H GND	CX1	GND		
21	BRN	/BSTB	–	RY5	D ZERO		
22	RED	/BRDY	H GND	RY4	GND		
23	ORG	PB0	–	RY3	+V		
24	YEL	–	–	RY2	–V		
25	GRN	PB1	HSTB3	RY1	31367004 LONGER 31367005 SHORTER		
26	BLU	/RCLK	HSTB3	RY6			
27	VIO	PB2	HSTB2	31367006			
28	GRY	PB3	HSTB2				
29	WHT	PB4	HSTB1				
30	BLK	PB5	HSTB1				
31	BRN	PB6	HSTB1				
32	RED	PB7	–				
33	ORG	PB8	GND(5V)				
34	YEL	PB9	THERM 1				
35	GRN	PB10	24V				
36	BLU	PB11	24V				
37	VIO	PB12	24V				
38	GRY	PB13	24V				
39	WHT	PB14	24V				
40	BLK	PB15	24V				
HARNESS ASSY P/N		31367007 SLAVE 31367009 MASTER	31367008 RIGHT 31367010 LEFT				

CONNECTOR PIN OUTS

LOC	37 PIN D SHELL I/O BD	25 PIN D SHELL A/D BD.	25 SOC D SHELL CPU BD.	24 CONT IEEE CPU BD.	15 SOC D SHELL I/O BD.	15 SOC D SHELL TO LA-95
1	ADR 0	GND	–	DI 01	/EVENT SYS	GND
2	ADR 1	IN CH 1	A IN	DI 02	1	MX0
3	ADR 2	GND	/A OUT	DI 03	2	GND
4	ADR 3	IN CH 2	JUMP	DI 04	3	MX1
5	ADR 4	GND	JUMP	EOI	4	GND
6	ADR 5	IN CH 3	/B OUT	DAV	5	MX2
7	/STBOUT	GND	GND	NRFD	6	GND
8	DO 0	IN CH 4	–	NDAC	7	ADLE
9	DO 1	GND	–	IFC	/EVENT 8	GND
10	DO 2	IN CH 5	/RES	SRQ	STT/STP	B1
11	DO 3	GND	–	ATN	EXT SPARE	B5
12	DO 4	IN CH 6	+5V	–	/TRIG XT	B2
13	DO 5	GND	+5V	DI 05	GND	B3
14	DO 6	IN CH 7	GND(5V)	DI 06	(SAMPLE)	B4
15	DO 7	GND	–	DI 07	(EXT SAMPLE)	+24V
16	/STBIN	IN CH 8	GND(5V)	DI 08		
17	DI 0	GND	–	REN		
18	DI 1	TRIG	–	GND		
19	DI 2	GND(5V)	–	GND		
20	DI 3	EVENT	D IN	GND		
21	DI 4	GND(5V)	GNG	GND		
22	DI 5	GND	–	GND		
23	DI 6	GND	+12V	GND		
24	DI 7	GND	–12V	GND		
25	DI 8	GND	–			
26	DI 9	ANALOG INPUT	SERIAL INPUT	PARALLEL INPUT		
27	DI 10					
28	DI 11					
29	/CLEAR					
30	SPARE 1					
31	SPARE 2					
32	SPARE 3					
33	/LATCHED					
34	GND					
35	GND					
36	GND					
37	GND					
	CUSTOMER UTILITY PORT					

CHANNEL 1 – 4
POT BOARD LEFT
31324-001
P1 24 PIN
3136 (LON

CHANNEL 5 – 8
POT BOARD RIGHT
31324-001
GAIN POT
ZERO POT
CAL SW.
3136 (SHO

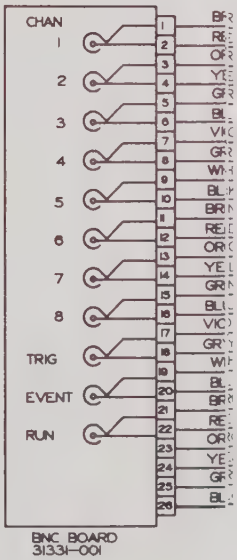

BNC BOARD
31331-001

NEXT ASSY	USED ON
APPLICATION	

REVISIONS			SIZE D
CHG LTR	DESCRIPTION		
C	REDRAW FOR CLARITY N.C.		

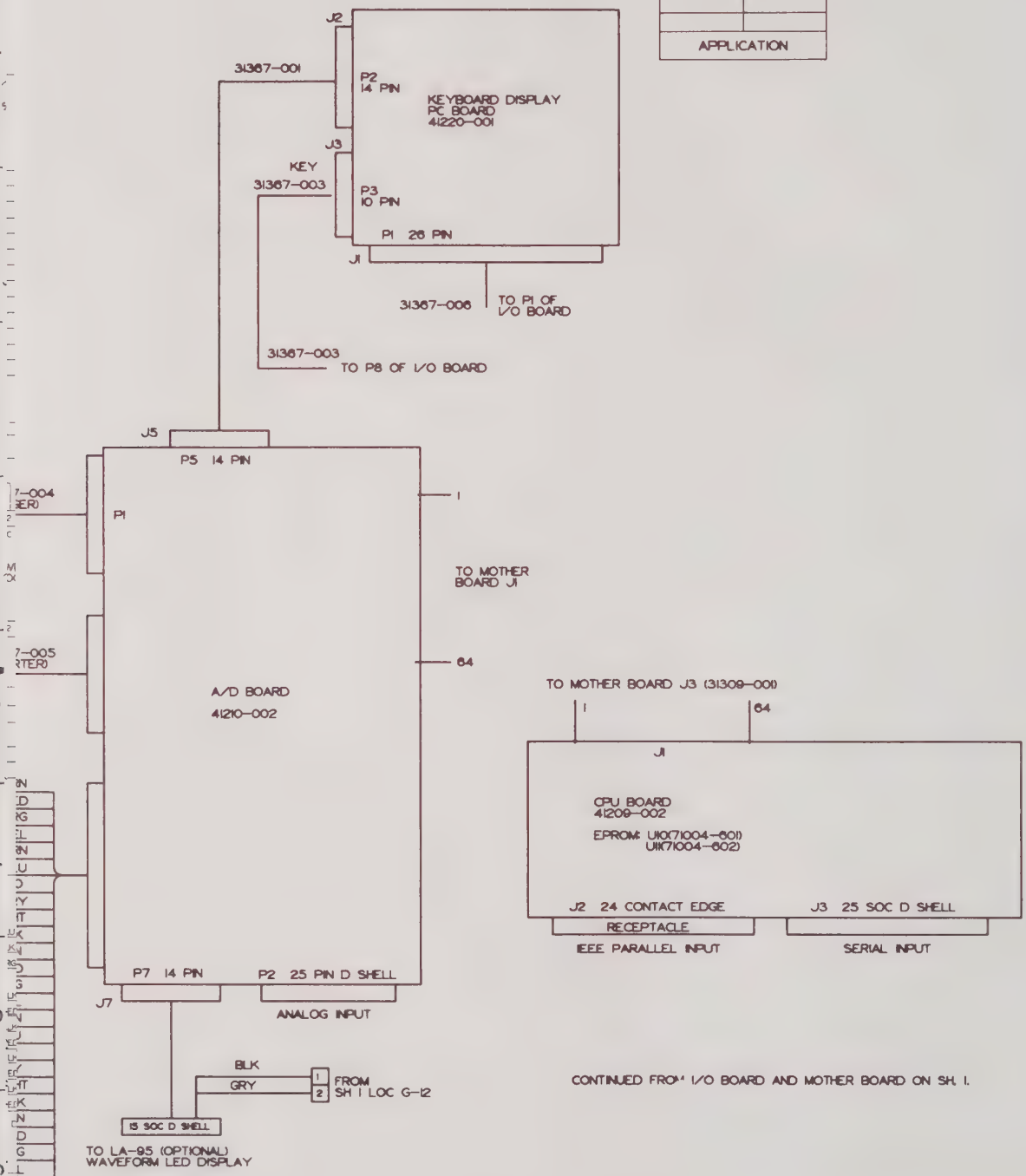

CONTINUED FROM I/O BOARD AND MOTHER BOARD ON SH. 1.

UNLESS OTHERWISE SPECIFIED	SIGNATURES	DATE
DIMENSIONS ARE IN INCHES	DWN DK	2/3/88
TOLERANCES ON FRACTIONS ±1/64 DECIMALS ±.005 ANGLES ±0° 30'	CHK	
ALL SURFACES REMOVE BURRS AND SHARP EDGES	ENG	
	MFG	
MATL-	APP	2-11-88
	ISSUED	
FINISH	SIMILAR TO	

Astro-Med Inc.

SCHEMATIC

200 MM/SEC MT9500

SIZE	DRAWING NO.	REV
D	41226200	C

SCALE - SHEET 2 CONT ON SHEET F

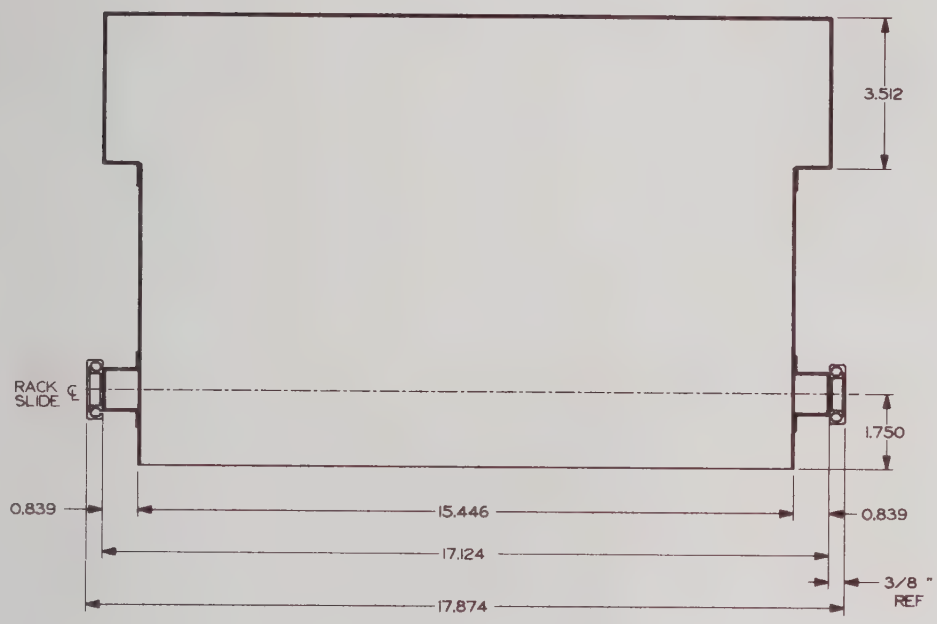
3.512
RACK SLIDE ℄
1.750
0.839
15.446
0.839
17.124
3/8 " REF
17.874

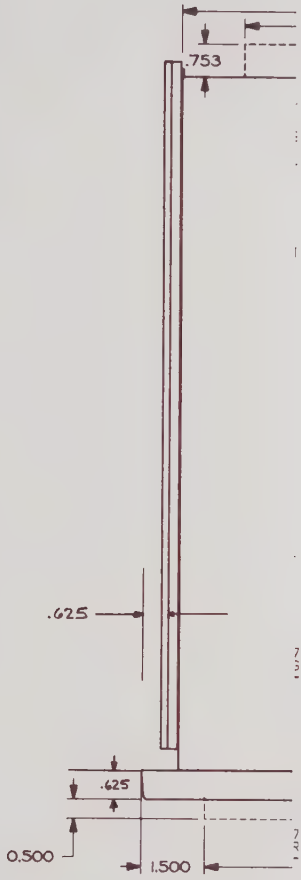
.753
.625
.625
0.500
1.500

SECTION A–A

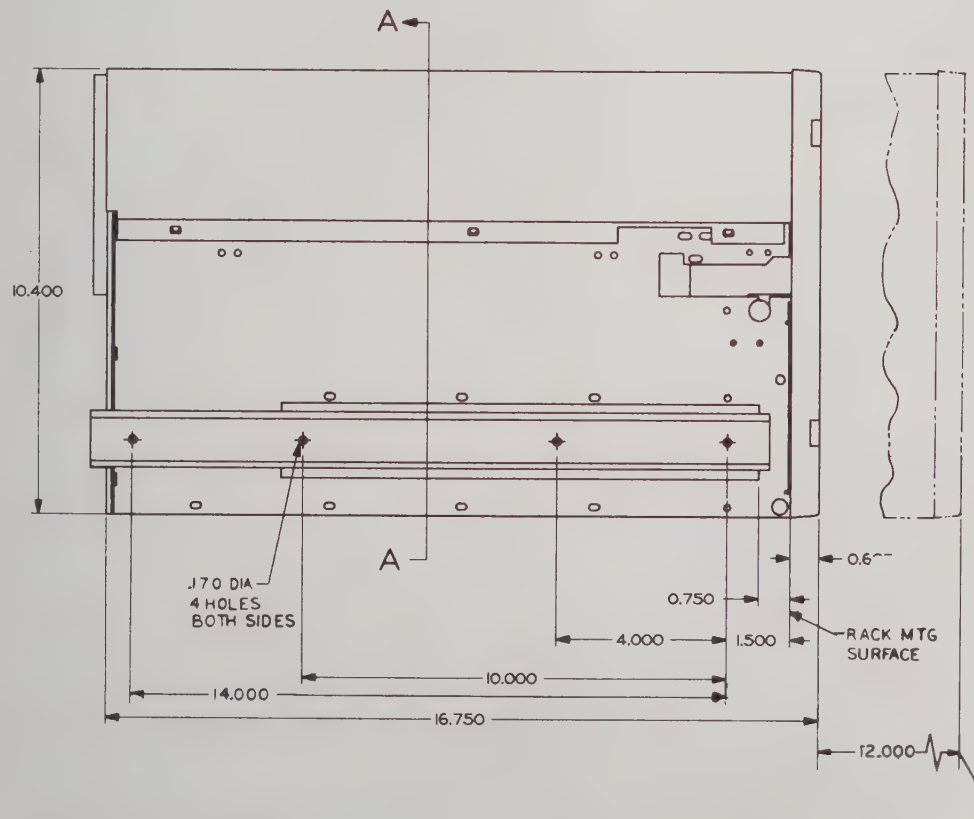
A
A
10.400
.170 DIA
4 HOLES
BOTH SIDES
0.750
4.000
1.500
0.6
RACK MTG
SURFACE
10.000
14.000
16.750
12.000
MAX SLIDE
EXTENSION

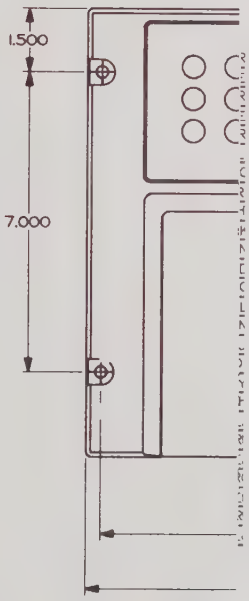
1.500
7.000

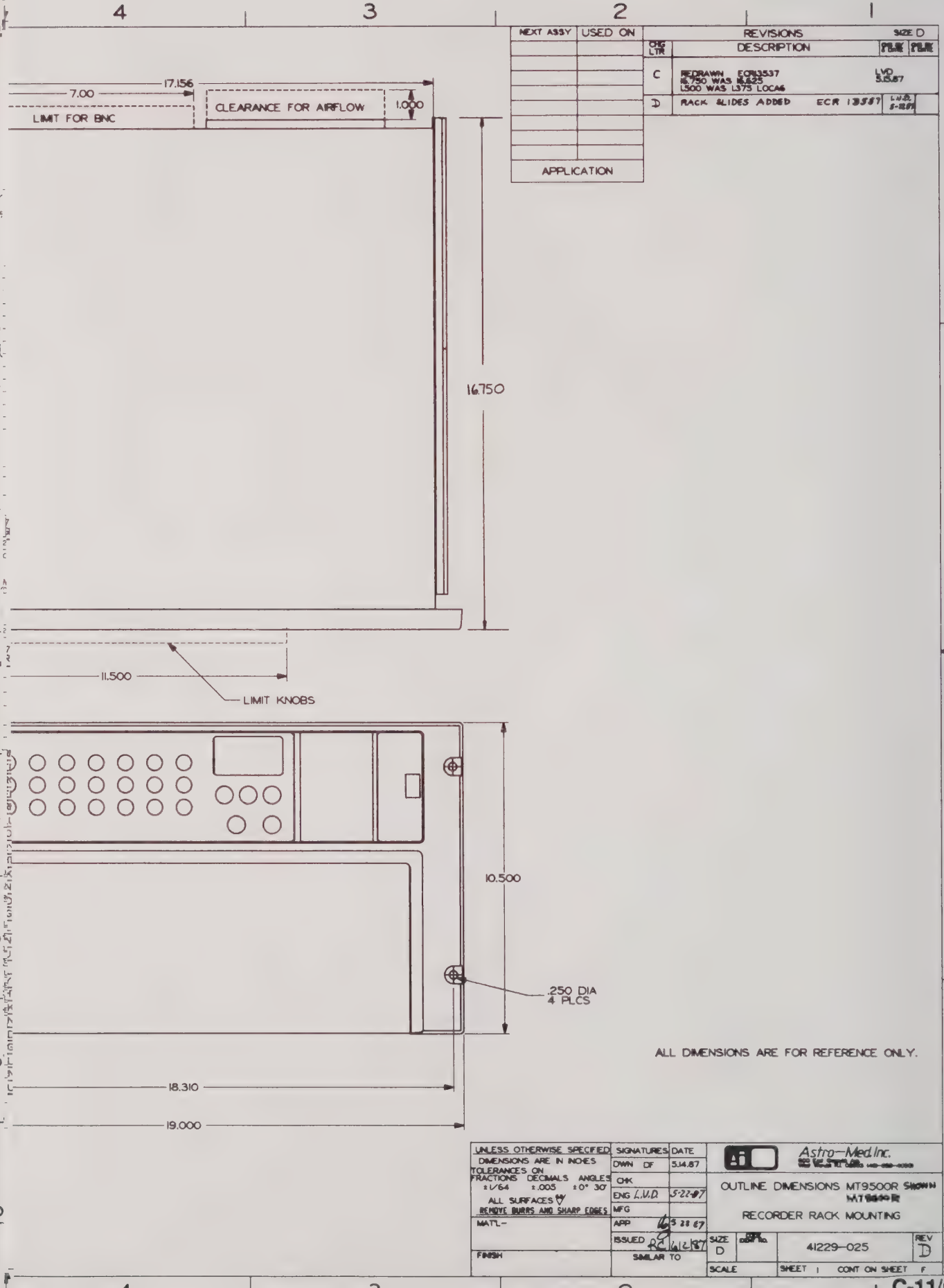

NEXT ASSY
USED ON
APPLICATION
REVISIONS
SIZE D
CHG LTR
DESCRIPTION
C
REDRAWN ECR13537
16.750 WAS 16.625
1.500 WAS 1.375 LOCA6
LVD 5.15.87
D
RACK SLIDES ADDED
ECR 13537
17.156
7.00
LIMIT FOR BNC
CLEARANCE FOR AIRFLOW
1.000
16.750
11.500
LIMIT KNOBS
10.500
.250 DIA
4 PLCS
18.310
19.000
ALL DIMENSIONS ARE FOR REFERENCE ONLY.
UNLESS OTHERWISE SPECIFIED
DIMENSIONS ARE IN INCHES
TOLERANCES ON
FRACTIONS ±1/64
DECIMALS ±.005
ANGLES ±0° 30'
ALL SURFACES
REMOVE BURRS AND SHARP EDGES
MATL-
FINISH
SIGNATURES
DATE
DWN DF 5.14.87
CHK
ENG L.V.D. 5-22-87
MFG
APP 5 28 87
ISSUED RC 6/2/87
SIMILAR TO
Astro-Med Inc.
OUTLINE DIMENSIONS MT9500R SHOWN
RECORDER RACK MOUNTING
SIZE D
41229-025
REV D
SCALE
SHEET 1
CONT ON SHEET F

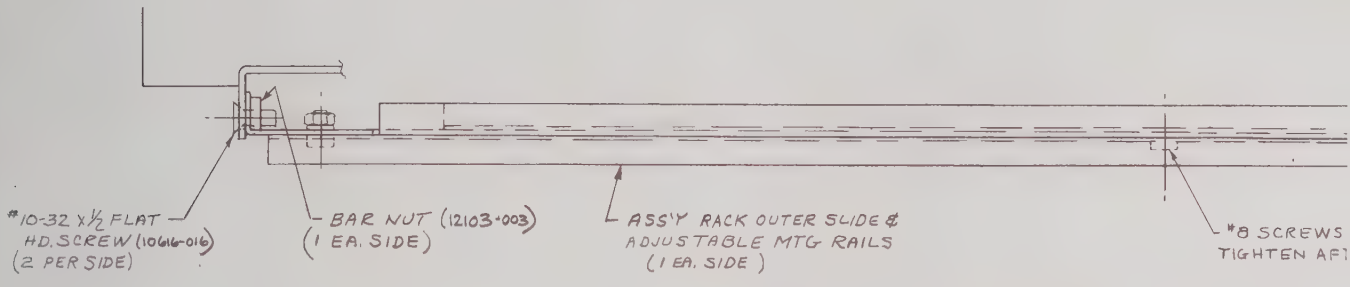

SECT A-A LEFT SIDE SHOWN (RIGHT OPPOSITE

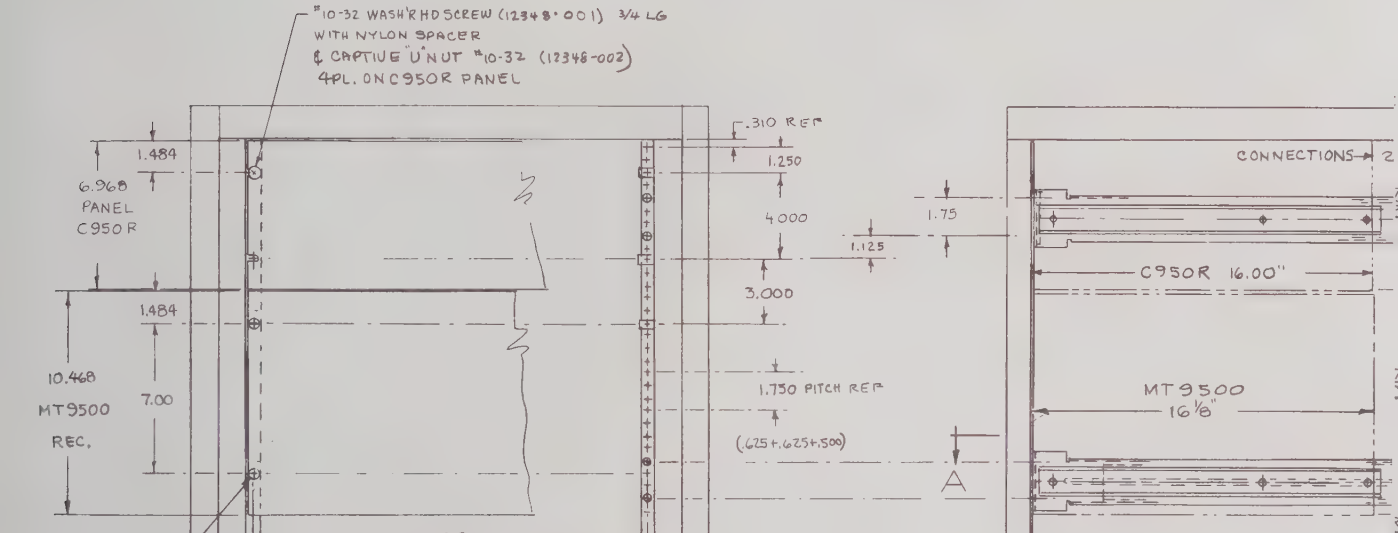

FRONT OF RACK

INSIDE OF RACK (FRONT TO BACK)

CABINET MOUNTING RAILS STANDARD

1 PITCH (1.750") = SPACES OF .625 + .625 + .500

41117-95X DRAWING NO | D REV

REVISIONS				
ZONE	CHG LTR	DESCRIPTION	CHG BY & DATE	APP BY & DATE
	A	NEW ECR 13695		
	B	ADD PARTS TABLE 14239	12/1/87	
	C	12348-001 WAS -025	12/17/87	
	D	10-32 ON FRONT WERE -001 (3/4 LG) 14476	2/4/88	

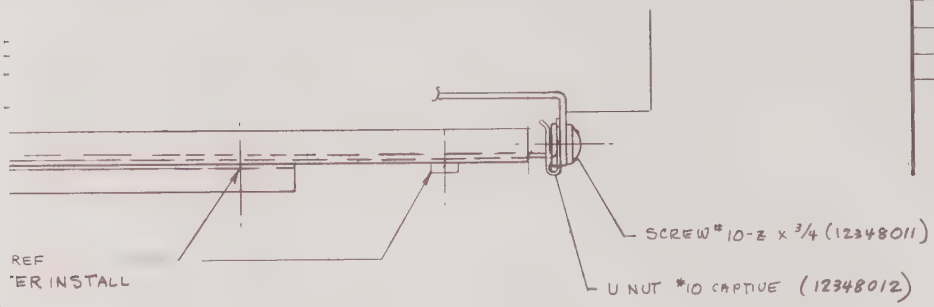

RACK ONLY SLIDES:

REAR	12348-011 #10-Z x 3/4 (10Z)	4 ea
	12348-012 U CLIP (10Z)	4 ea
FRONT	10616-016 SCR 10-32 x 1/2	4 ea
	12103-003 BAR NUT	2 ea
MT9500/8800 FRONT	12348-002 U NUT (10-32)	4 ea (NEED 2)
	12348-003 SCREW (10-32 x 1)	4 ea
C950R FRONT	12348-002 U NUT (10-32)	4 ea
	12348-001 SCREW (10-32 x 3/4)	4 ea

NOTE 1 KIT (41117 950) SHIPPED WITH MT9500 (31182001 MUST BE REV. "C" OR LATER)
1 KIT (41117 951) " " C950R OR C950

	C950R
	MT9500
NEXT ASSY	USED ON
APPLICATION	
DRAWING LEVEL	

UNLESS OTHERWISE SPECIFIED DIMENSIONS ARE IN INCHES
TOLERANCES ON FRACTIONS ±1/64 DECIMALS ±.005 ANGLES ±0° 30'
ALL SURFACES 63
REMOVE BURRS AND SHARP EDGES
MAT'L-
FINISH

SIGNATURES	DATE
DWN ASV	6-26-87
CHK	7/27/87
ENG	
MFG	
APP	8 26 87
ISSUED	8/27/87
SIMILAR TO	

Astro-Med, Inc.
800 East Greenwich Ave.
West Warwick, R.I. 02893 (401-828-4000)

RACK MOUNTING
MT 95/8800 & C950R.

SIZE D | CODE IDENT NO | 41117-95X | REV D
SCALE 1/4 & 1 | SHEET 1 CONT ON SHEET F

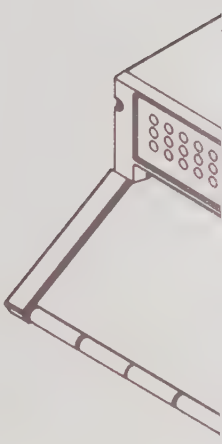

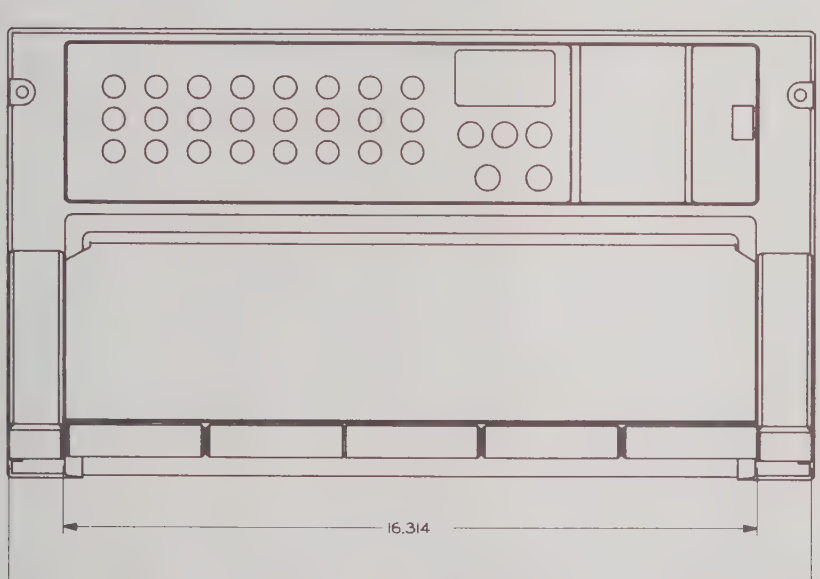
16.314
18.874

NEXT ASSY	USED ON
APPLICATION	

REVISIONS		SIZE D	
CHG LTR	DESCRIPTION		
B	DWG NO WAS 41514-000		

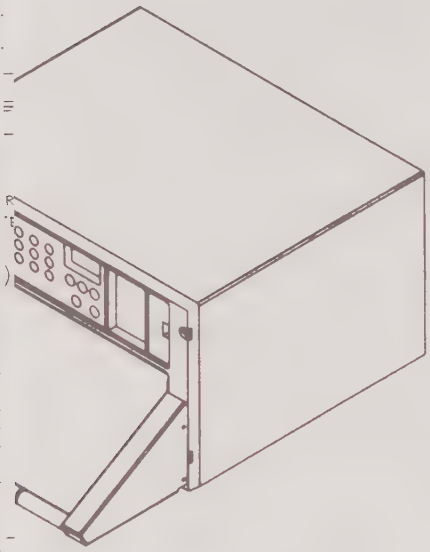

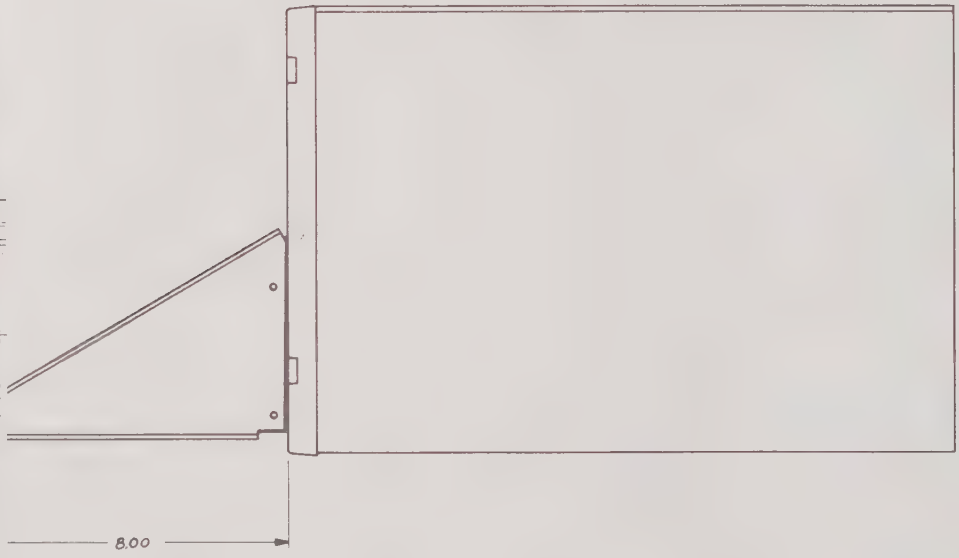

1. ALL DIMENSIONS ARE FOR REFERENCE ONLY.

UNLESS OTHERWISE SPECIFIED	SIGNATURES	DATE	Astro-Med Inc.
DIMENSIONS ARE IN INCHES	DWN DK	5/29/87	
TOLERANCES ON FRACTIONS ±1/64 DECIMALS ±.005 ANGLES ±0° 30'	CHK	7/21/87	ASSY MT9500 WITH
ALL SURFACES 63 REMOVE BURRS AND SHARP EDGES	ENG		WRITING TABLE
MATL-	MFG		CAD NO 41514-000
	APP		
	ISSUED RC	7/27/87	SIZE D · CODE IDENT NO. · FILE 41229-026 · REV B
FINISH	SIMILAR TO		SCALE 1:2 · SHEET 1 · CONT ON SHEET F

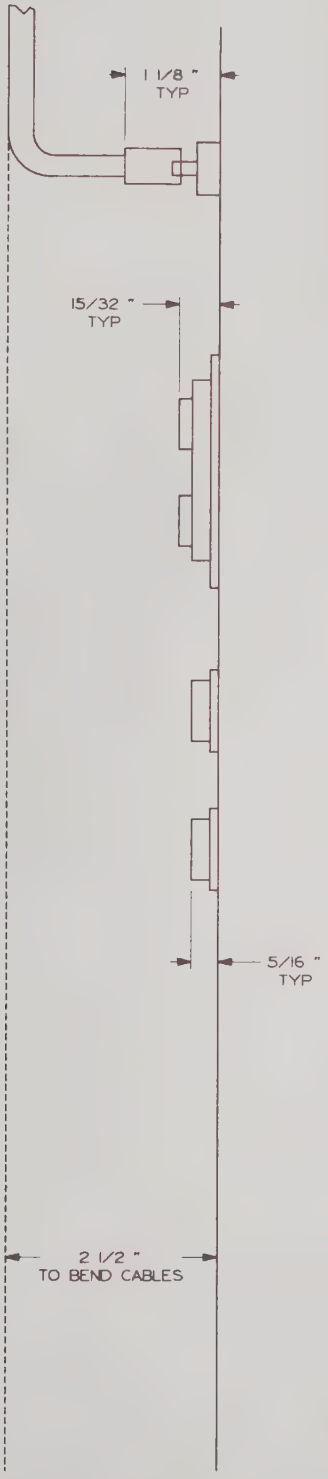

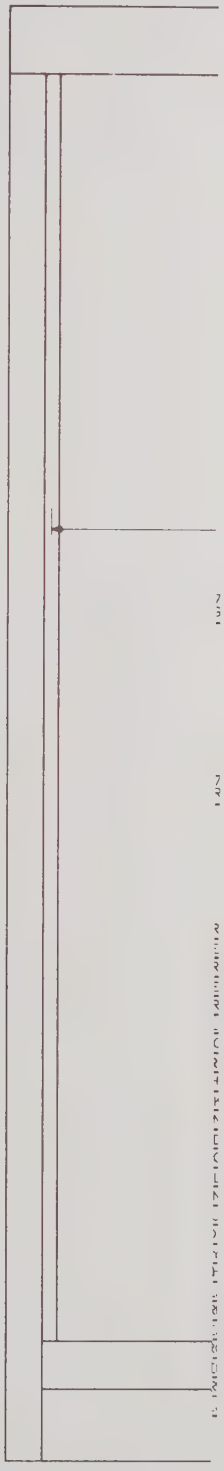

SIDE VIEW C-150R

NEXT ASSY	USED ON
APPLICATION	

REVISIONS		SIZE D
CHG LTR	DESCRIPTION	
D	14 004	DF 10/9/87

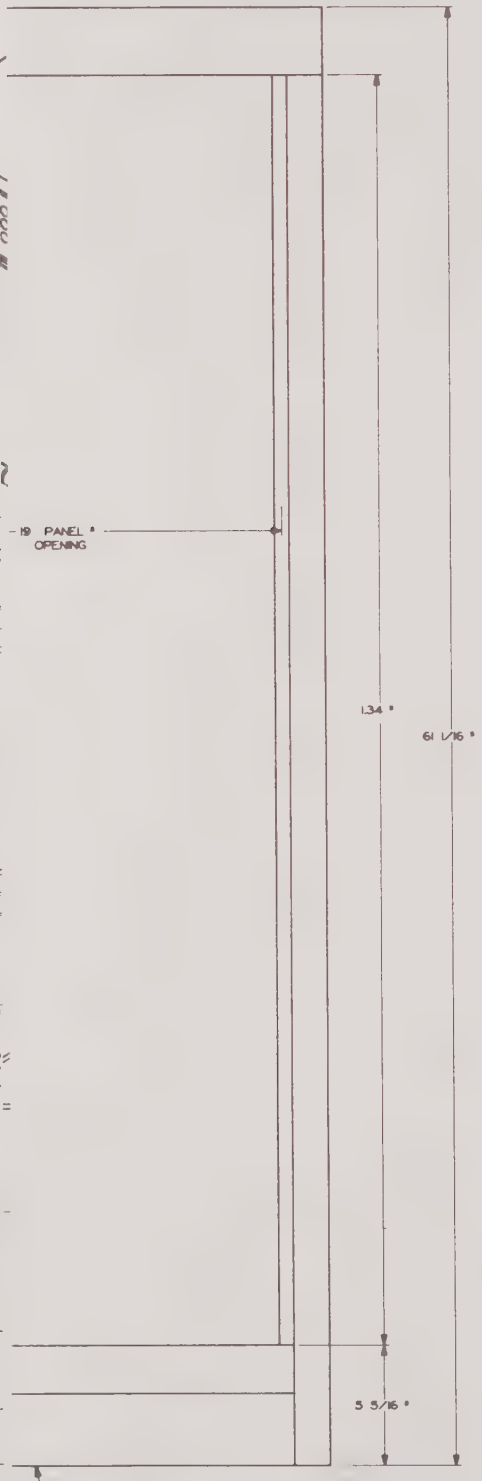

UNLESS OTHERWISE SPECIFIED	SIGNATURES	DATE
DIMENSIONS ARE IN INCHES	DWN DF	9.24.87
TOLERANCES ON FRACTIONS DECIMALS ANGLES ±1/64 ±.005 ±0° 30'	CHK	
ALL SURFACES REMOVE BURRS AND SHARP EDGES	ENG	
	MFG	
MATL–	APP	
FINISH	ISSUED	
	SIMILAR TO	

Astro-Med Inc.

MT9500R AND C-450R SIG COND

MT9500R

WITH OPTIONAL CABINET

SIZE	CAGE NO.		REV
D		41229-X	D
SCALE NONE	SHEET 2	CONT ON SHEET F	

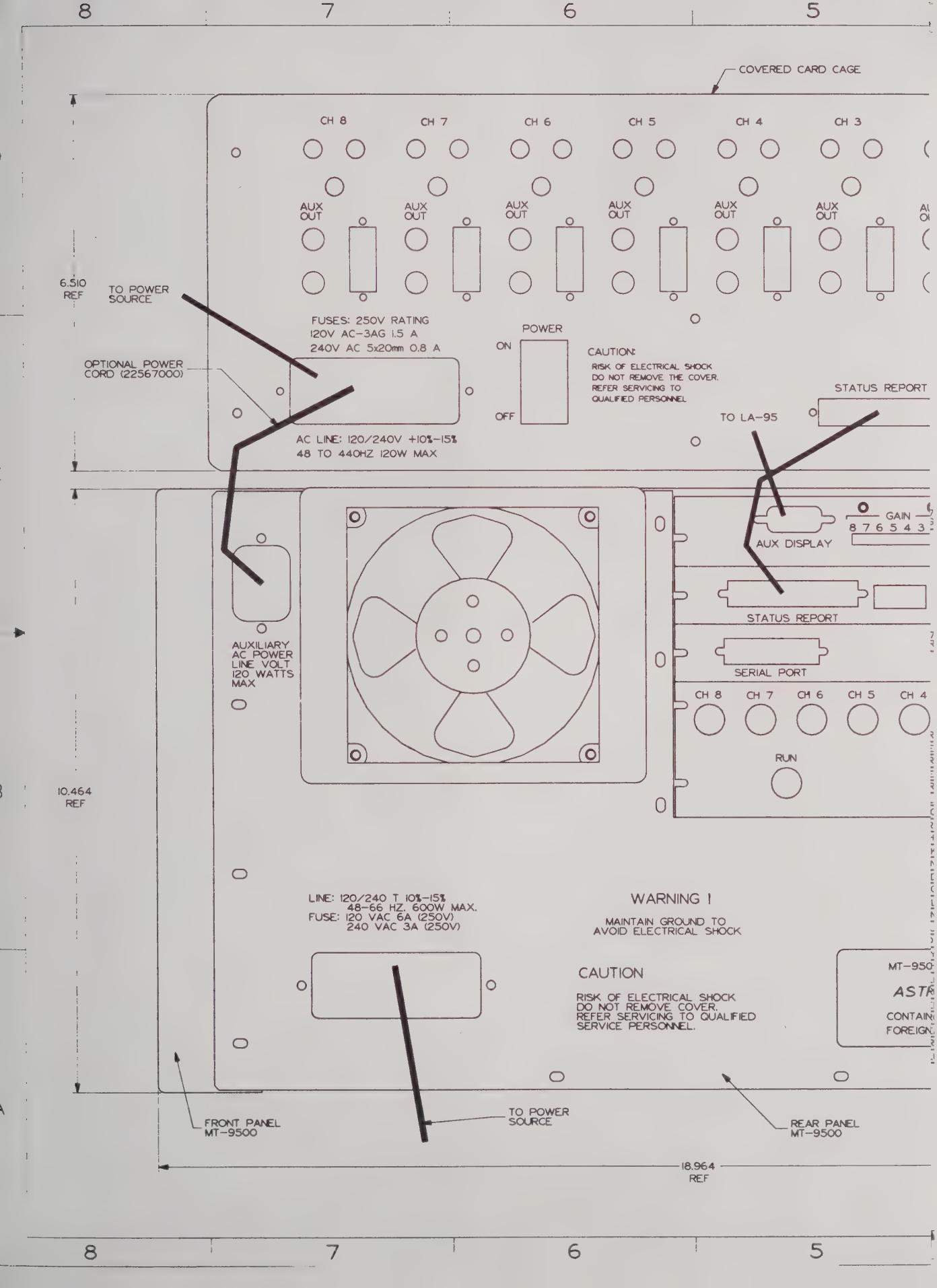
COVERED CARD CAGE
CH 8
CH 7
CH 6
CH 5
CH 4
CH 3
AUX OUT
6.510 REF
TO POWER SOURCE
FUSES: 250V RATING
120V AC-3AG 1.5 A
240V AC 5x20mm 0.8 A
POWER
ON
OFF
CAUTION:
RISK OF ELECTRICAL SHOCK
DO NOT REMOVE THE COVER.
REFER SERVICING TO
QUALIFIED PERSONNEL
OPTIONAL POWER CORD (22567000)
AC LINE: 120/240V +10%-15%
48 TO 440HZ 120W MAX
STATUS REPORT
TO LA-95
GAIN
8 7 6 5 4 3
AUX DISPLAY
STATUS REPORT
SERIAL PORT
CH 8
CH 7
CH 6
CH 5
CH 4
RUN
AUXILIARY AC POWER LINE VOLT 120 WATTS MAX
10.464 REF
LINE: 120/240 T 10%-15%
48-66 HZ. 600W MAX.
FUSE: 120 VAC 6A (250V)
240 VAC 3A (250V)
WARNING !
MAINTAIN GROUND TO AVOID ELECTRICAL SHOCK
CAUTION
RISK OF ELECTRICAL SHOCK
DO NOT REMOVE COVER.
REFER SERVICING TO QUALIFIED
SERVICE PERSONNEL.
MT-950
ASTR
CONTAIN
FOREIGN
FRONT PANEL MT-9500
TO POWER SOURCE
REAR PANEL MT-9500
18.964 REF

NEXT ASSY	USED ON
APPLICATION	

REVISIONS			SIZE D
CHG LTR	DESCRIPTION	PR & DATE	PR & DATE
A	ISSUED		
B	UPDATED BANANA JACKS GRAY WAS BLACK. BLACK WAS GRAY. ADDED STATUS REPORT ECR13420	JA 4.28.87	
C	REDRAWN TO LATEST DESIGN ECR 14006	DF 9.24.87	
D	CORRECT SPELLING STATUS REPORT WAS DIGITAL DATA PORT ECR 14006	PR 10/23/87	

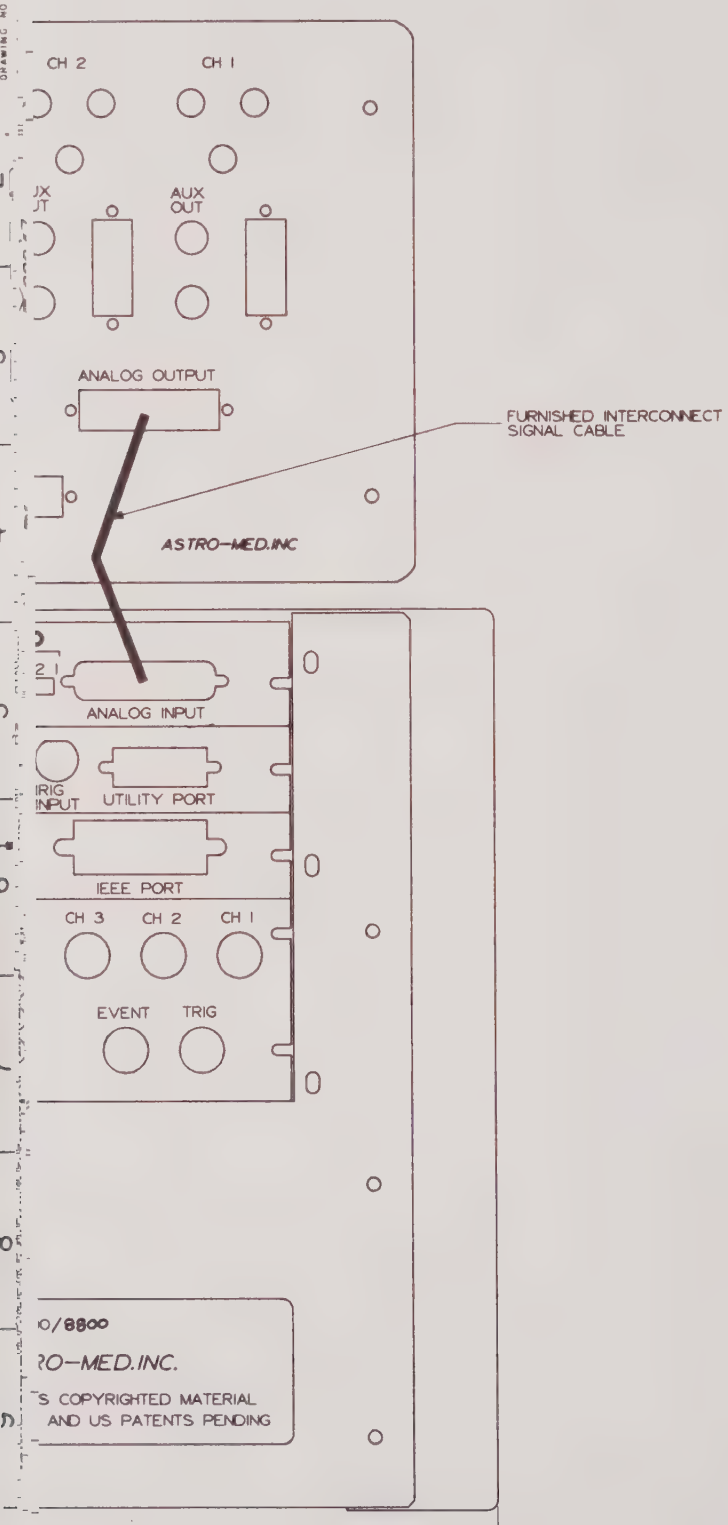

UNLESS OTHERWISE SPECIFIED	SIGNATURES	DATE
DIMENSIONS ARE IN INCHES	DWN DF	9.24.87
TOLERANCES ON FRACTIONS DECIMALS ANGLES ±1/64 ±.005 ±0° 30'	CHK	
ALL SURFACES REMOVE BURRS AND SHARP EDGES	ENG	
MATL-	MFG	
	APP	
	ISSUED	
FINISH	SIMILAR TO	

Astro-Med, Inc.

MT9500R AND C-950R SIG COND
MT8800R
WITH OPTIONAL CABINET

SIZE	CAGE IDENT NO.		REV
D		41229-X	D
SCALE		SHEET 1	CONT ON SHEET 2

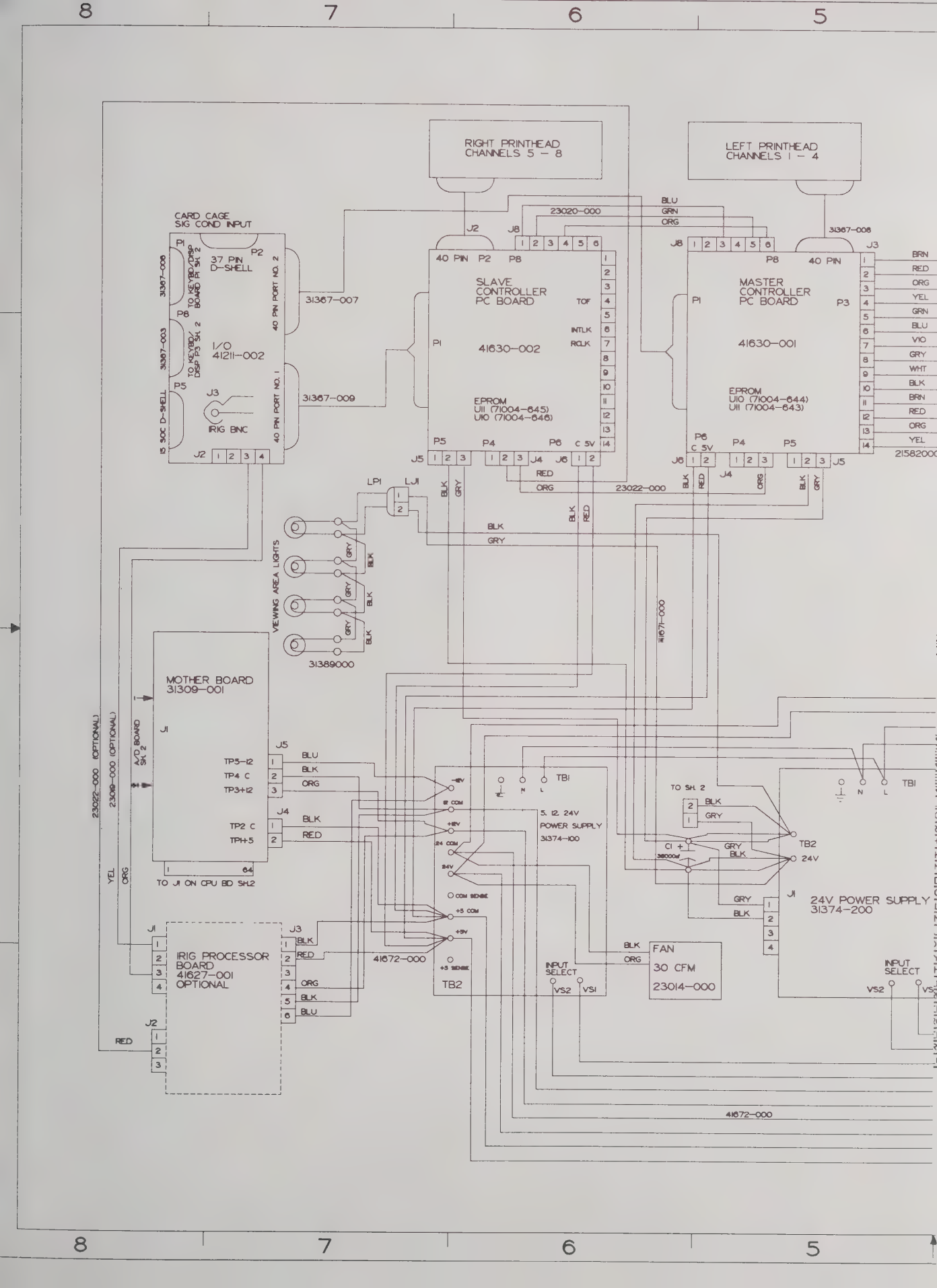

RIGHT PRINTHEAD CHANNELS 5 – 8
LEFT PRINTHEAD CHANNELS 1 – 4
CARD CAGE SIG COND INPUT
37 PIN D-SHELL
I/O 41211-002
IRIG BNC
31367-007
31367-009
31367-008
31367-003
TO KEYBD/DISP BOARD P1 SH. 2
TO KEYBD/DISP P3 SH. 2
40 PIN PORT NO. 2
40 PIN PORT NO. 1
15 SOC D-SHELL
SLAVE CONTROLLER PC BOARD
41630-002
EPROM U11 (71004-645) U10 (71004-646)
MASTER CONTROLLER PC BOARD
41630-001
EPROM U10 (71004-644) U11 (71004-643)
23020-000
23022-000
21582000
VIEWING AREA LIGHTS
31389000
41671-000
MOTHER BOARD 31309-001
TO J1 ON CPU BD SH.2
A/D BOARD SH. 2
23022-000 (OPTIONAL)
23019-000 (OPTIONAL)
IRIG PROCESSOR BOARD 41627-001 OPTIONAL
41672-000
5, 12, 24V POWER SUPPLY 31374-100
TO SH. 2
24V POWER SUPPLY 31374-200
FAN 30 CFM 23014-000
INPUT SELECT
41672-000

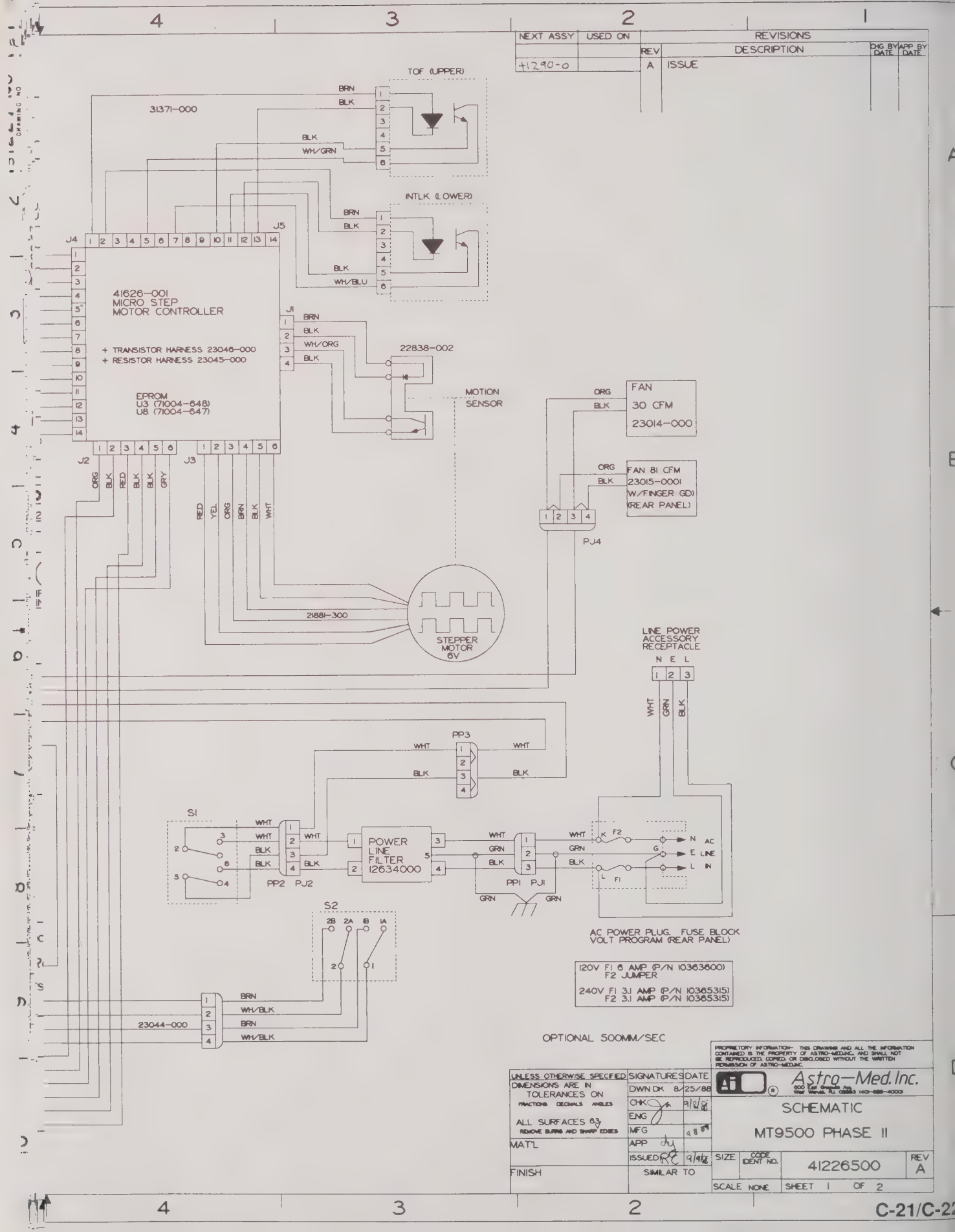
NEXT ASSY
USED ON
REVISIONS
REV
DESCRIPTION
DRG BY DATE
APP BY DATE
41290-0
A
ISSUE
TOF (UPPER)
INTLK (LOWER)
31371-000
41626-001
MICRO STEP
MOTOR CONTROLLER
+ TRANSISTOR HARNESS 23046-000
+ RESISTOR HARNESS 23045-000
EPROM
U3 (71004-648)
U8 (71004-647)
22838-002
MOTION
SENSOR
FAN
30 CFM
23014-000
FAN 81 CFM
23015-0001
W/FINGER GD)
(REAR PANEL)
PJ4
21881-300
STEPPER
MOTOR
6V
LINE POWER
ACCESSORY
RECEPTACLE
N E L
PP3
S1
POWER
LINE
FILTER
12634000
PP2 PJ2
PPI PJI
S2
23044-000
AC POWER PLUG, FUSE BLOCK
VOLT PROGRAM (REAR PANEL)
120V F1 6 AMP (P/N 10363600)
F2 JUMPER
240V F1 3.1 AMP (P/N 10365315)
F2 3.1 AMP (P/N 10365315)
OPTIONAL 500MM/SEC
PROPRIETORY INFORMATION- THIS DRAWING AND ALL THE INFORMATION CONTAINED IS THE PROPERTY OF ASTRO-MED,INC. AND SHALL NOT BE REPRODUCED, COPIED, OR DISCLOSED WITHOUT THE WRITTEN PERMISSION OF ASTRO-MED,INC.
UNLESS OTHERWISE SPECIFIED
DIMENSIONS ARE IN
TOLERANCES ON
FRACTIONS DECIMALS ANGLES
ALL SURFACES 63
REMOVE BURRS AND SHARP EDGES
MAT'L
FINISH
SIGNATURES
DATE
DWN DK 8/25/88
CHK
ENG
MFG
APP
ISSUED
SIMILAR TO
Astro-Med. Inc.
SCHEMATIC
MT9500 PHASE II
SIZE
CODE IDENT NO.
41226500
REV A
SCALE NONE
SHEET 1 OF 2
C-21/C-22

CONNECTOR PIN OUTS, FLAT CABLE

LOC	COLOR	CONT PORT 40 PIN TO I/O BD.	CONTROL 40 PIN TO P/H TYP	KEYBD 26 PIN TO I/O BD.	POT BD. 24 PIN TO A/D BD.	KEYBD. 14 PIN TO A/D BD.	KEYBD. 10 PIN TO I/O BD.
1	BRN	COM	24V	DIGIT 1	GND	+V	CX4
2	RED	/AGRESET	H GND	2	ACAL	–	CX3
3	ORG	PA0	24V	3	SI	–V	CX2
4	YEL	PA1	H GND	4	GND	TRIG MAN	CX1
5	GRN	PA2	24V	5	BCAL	GND	RY1
6	BLU	PA3	H GND	6	S2	TA	RY2
7	VIO	PA4	24V	7	GND	TB	RY3
8	GRY	PA5	H GND	8	CCAL	TC	RY4
9	WHT	PA6	24V	SEG A	S3	–	RY5
10	BLK	PA7	HGND	B	GND	+5V	RY6
11	BRN	–	5V	C	DCAL	/LED	31367003
12	RED	–	H GND	D	S4	/LABEL	
13	ORG	ARDY	H LATCH	E	GND	/MAN EVENT	
14	YEL	BRDY	H GND	F	GND	–	
15	GRN	PGM TEST	HCLK 0	G	A ZERO	31367001	
16	BLU	TOF	H GND	SEG DP	GND		
17	VIO	INTLK	NHD 0	CX4	B ZERO		
18	GRY	+5	H GND	CX3	GND		
19	WHT	/ARDY	–	CX2	C ZERO		
20	BLK	/ASTB	H GND	CX1	GND		
21	BRN	/BSTB	–	RY5	D ZERO		
22	RED	/BRDY	H GND	RY4	GND		
23	ORG	PB0	–	RY3	+V		
24	YEL	–	–	RY2	–V		
25	GRN	PB1	HSTB3	RY1	31367004 LONGER 31367005 SHORTER		
26	BLU	/RCLK	HSTB3	RY6			
27	VIO	PB2	HSTB2	31367006			
28	GRY	PB3	HSTB2				
29	WHT	PB4	HSTBI				
30	BLK	PB5	HSTBI				
31	BRN	PB6	HSTBI				
32	RED	PB7	–				
33	ORG	PB8	GND(5V)				
34	YEL	PB9	THERM 1				
35	GRN	PB10	24V				
36	BLU	PB11	24V				
37	VIO	PB12	24V				
38	GRY	PB13	24V				
39	WHT	PB14	24V				
40	BLK	PB15	24V				
HARNESS ASSY P/N		31367007 SLAVE 31367009 MASTER	31367008 RIGHT 31367010 LEFT				

CONNECTOR PIN OUTS

LOC	37 PIN D SHELL I/O BD	25 PIN D SHELL A/D BD.	25 SOC D SHELL CPU BD.	24 CONT IEEE CPU BD.	15 SOC D SHELL I/O BD.	15 SOC D SHELL TO LA-95
1	ADR 0	GND	–	DI 01	/EVENT SYS	GND
2	ADR 1	IN CH 1	A IN	DI 02	1	MX0
3	ADR 2	GND	/A OUT	DI 03	2	GND
4	ADR 3	IN CH 2	JUMP	DI 04	3	MX1
5	ADR 4	GND	JUMP	EOI	4	GND
6	ADR 5	IN CH 3	/B OUT	DAV	5	MX2
7	/STBOUT	GND	GND	NRFD	6	GND
8	DO 0	IN CH 4	–	NDAC	7	ADLE
9	DO 1	GND	–	IFC	/EVENT 8	GND
10	DO 2	IN CH 5	/RES	SRQ	STT/STP	B1
11	DO 3	GND	–	ATN	EXT SPARE	B5
12	DO 4	IN CH 6	+5V	–	/TRIG XT	B2
13	DO 5	GND	+5V	DI 05	GND	B3
14	DO 6	IN CH 7	GND(5V)	DI 06	(SAMPLE)	B4
15	DO 7	GND	–	DI 07	(EXT SAMPLE)	+24V
16	/STBIN	IN CH 8	GND(5V)	DI 08		
17	DI 0	GND	–	REN		
18	DI 1	TRIG	–	GND		
19	DI 2	GND(5V)	–	GND		
20	DI 3	EVENT	D IN	GND		
21	DI 4	GND(5V)	GNG	GND		
22	DI 5	GND	–	GND		
23	DI 6	GND	+12V	GND		
24	DI 7	GND	–12V	GND		
25	DI 8	GND	–			
26	DI 9					
27	DI 10					
28	DI 11					
29	/CLEAR					
30	SPARE 1					
31	SPARE 2					
32	SPARE 3					
33	/LATCHED					
34	GND					
35	GND					
36	GND					
37	GND					
	CUSTOMER UTILITY PORT	ANALOG INPUT	SERIAL INPUT	PARALLEL INPUT		

CHANNEL 1 – 4
POT BOARD LEFT
31324-001
P1
24 PIN

31367 (LONG

CHANNEL 5 – 8
POT BOARD RIGHT
31324-001
GAIN POT
ZERO POT
CAL SW.

31367 (SHOR

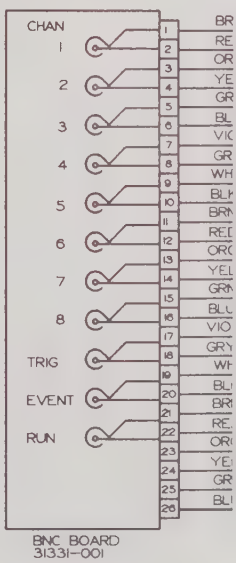

NEXT ASSY	USED ON
41290-0	
APPLICATION	

REVISIONS			SIZE D
CHG LTR	DESCRIPTION	PR BY & DATE	PR BY & DATE

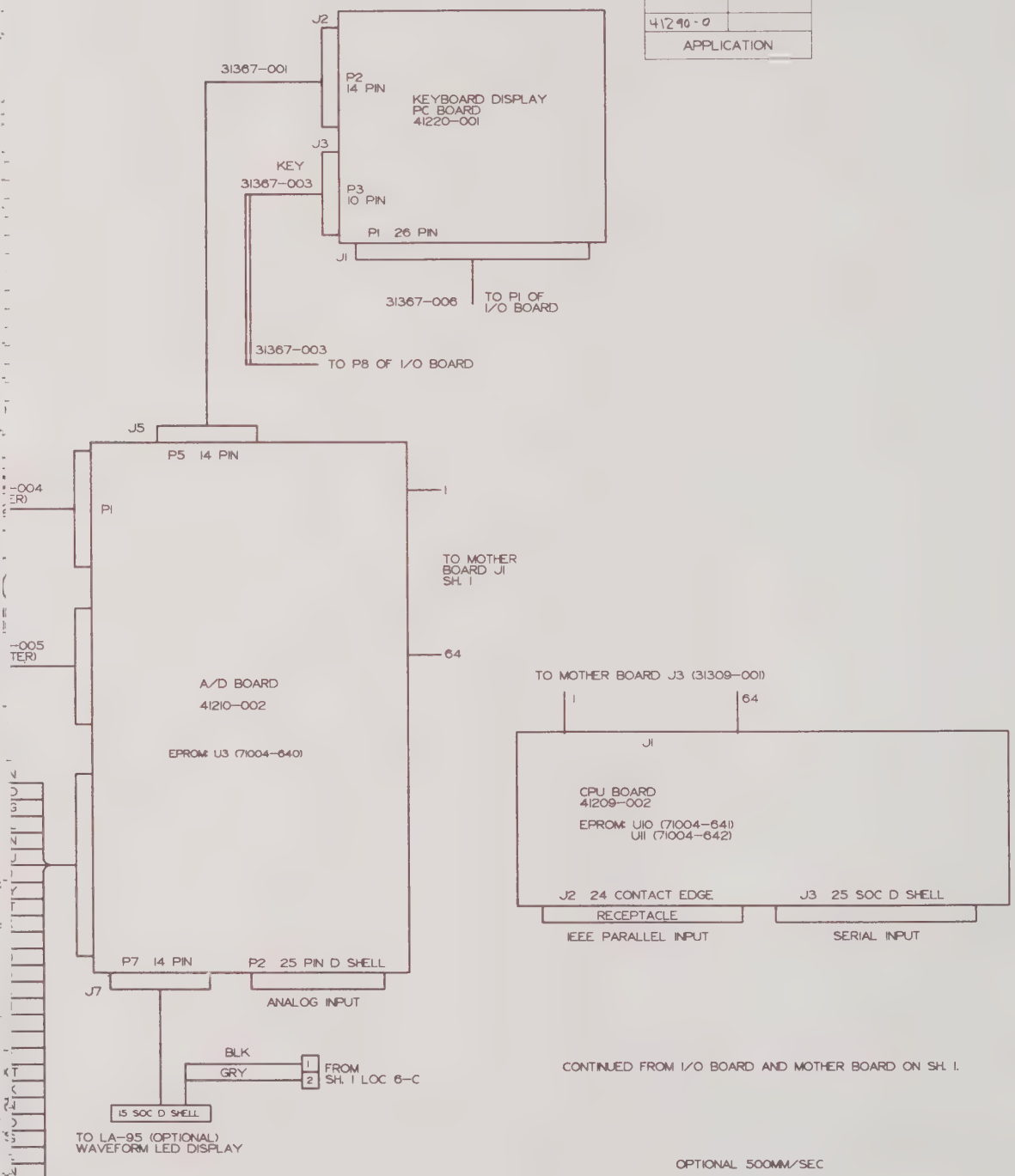

UNLESS OTHERWISE SPECIFIED	SIGNATURES	DATE
DIMENSIONS ARE IN INCHES	DWN DK	2/3/88
TOLERANCES ON FRACTIONS DECIMALS ANGLES ±1/64 ±.005 ±0° 30'	CHK	9/8/88
ALL SURFACES ▽ REMOVE BURRS AND SHARP EDGES	ENG	
	MFG	
MATL-	APP	10 Sep 88
	ISSUED	9/9/88
FINISH	SIMILAR TO	

Astro-Med, Inc.
600 East Greenwich Ave.
West Warwick, RI 02893 (401-828-4000)

SCHEMATIC

MT9500 PHASE II

SIZE	CODE IDENT NO.		REV
D		41226500	A
SCALE –		SHEET 2 CONT ON SHEET F	

Appendix D: Hardcopy of Test/Calibration Diskette Contents

```
40     IBINIT1 = 58892
70     IBINIT2 = IBINIT1 + 3
100     BLOAD "BIB.M",IBINIT1
130     CALL IBINIT1(IBFIND,IBSTOP,IBTRG,IBCLR,IBPCT,IBSIC,IBLOC,IBPPC,IBBNA,IBO
160     CALL IBINIT2(IBGTS,IBCAC,IBWAIT,IBPOKE,IBWRTF,IBWRTA,IBWRT,IBCMDA,IBCMD,
190 REM
220 REM
250 REM     ************************************************************
280 REM     ------------------------------------------------------------
310 REM     -                                                          -
340 REM     -            MT-9500 TEST/DEMO PROGRAM                     -
370 REM     -            for pkg ID 117 or higher                      -
400 REM     -                                                          -
430 REM     -            DATE:        04/06/88                         -
460 REM     -            AUTHOR:      M. SULLIVAN                      -
490 REM     -                                                          -
520 REM     -              written in IBM Basic                        -
550 REM     -      makes use of IBM GPIB adaptor subroutines           -
580 REM     -                                                          -
610 REM     -              designed for MT9500                         -
640 REM     -                                                          -
650 REM     -          modified for new motor protocol                 -
651 REM     -                            KJM     7 June 1988           -
670 REM     ------------------------------------------------------------
700 REM     ************************************************************
730 REM
760 REM
790 REM ----- ------ Initialize ----------------
820 REM
850     DIM ARRAY(3)
880     DIM CHN$(8),MTFILE$(8)
910     DIM BUFF$(8)
940     DIM HIGH(8),LOW(8),AVG(8)
970 REM
1000 REM GPIB0% is name given to interface adaptor board
1030 REM subroutines which begin with IB are defined by GPIB handler
1060 REM
1090     UNL% = &H3F      ' GPIB unlisten command
1120     UNT% = &H5F      ' GPIB untalk command
1150     LLO% = &H11      ' GPIB local lock out
1180     DCL% = &H14      ' GPIB device clear
1210 REM
1240     MTBUF$=SPACE$(40)
1270     CMD$ = SPACE$(10)        ' command buffer
1300     WRT$ = SPACE$(255)       ' write buffer
1330 REM
1360     ATLISTEN% = &H20  'IBM-AT TO LISTEN
1390     MTLISTEN% = &H25  'MT-8500 TO LISTEN
1420     ATTALK%   = &H40  'IBM-AT TO TALK
1450     MTTALK%   = &H45  'MT-8500 TO TALK
1480 REM
1510  RATE$="mm/sec":SP%=25:RG$="1":MODE%=0
1540  FFLAG%=0:POINTER%=50:RETRY%=0
1570 REM
1600  FOR I=1 TO 8:CHN$(I)=STR$(I):CHN$(I)=RIGHT$(CHN$(I),1):NEXT
1630 REM
1660  BUFF$(1)="CHANNEL   #1
1690  BUFF$(2)="CHANNEL   #2
1720  BUFF$(3)="CHANNEL   #3
1750  BUFF$(4)="CHANNEL   #4
1780  BUFF$(5)="CHANNEL   #5
1810  BUFF$(6)="CHANNEL   #6
1840  BUFF$(7)="CHANNEL   #7
1870  BUFF$(8)="CHANNEL   #8
1900 REM
```



```
1960 REM
1990 REM ---------------- Initial menu (select interface) ---------
2020 REM
2050 KEY OFF:COLOR 0,1:CLS:COLOR 15,1
2060 AP95=0: DL95=0: DC95=0: OM95=0: DI95=0: F200=0 'ASSUME NO OPTIONS INSTALLEd
2070 NEWMOTOR=0
2080 LOCATE 5,19:PRINT"MT-9500 Computer Remote Control  v 2.1"
2110 LOCATE 6,19:PRINT"-----------------------------"
2120 LOCATE 13,21:PRINT"TYPE Y IF AP-95 IS INSTALLED"
2122 B$=INKEY$:IF B$=""THEN 2122
2124 IF B$="Y" OR B$="y" THEN AP95=1
2126 LOCATE 13,21:PRINT"TYPE Y IF DL-95 IS INSTALLED  *"
2128 B$=INKEY$:IF B$=""THEN 2128
2130 IF B$="Y" OR B$="y"THEN DL95=1
2132 LOCATE 13,21:PRINT"TYPE Y IF DC-95 IS INSTALLED **"
2134 B$=INKEY$:IF B$=""THEN 2134
2136 IF B$="Y" OR B$="y"THEN DC95=1
2138 LOCATE 13,21:PRINT"TYPE Y IF OM-95 IS INSTALLED ***"
2140 B$=INKEY$:IF B$=""THEN 2140
2142 IF B$="Y" OR B$="y"THEN OM95=1
2144 LOCATE 13,21:PRINT"TYPE Y IF DI-95 IS INSTALLED ****"
2146 B$=INKEY$:IF B$=""THEN 2146
2148 IF B$="Y" OR B$="y"THEN DI95=1
2150 LOCATE 13,21:PRINT"TYPE Y IF 200 SPEED INSTALLED*****"
2152 B$=INKEY$:IF B$=""THEN 2152
2154 IF B$="Y" OR B$="y"THEN F200=1
2156 LOCATE 13,21:  PRINT "TYPE Y IF FIRST DIGIT OF THE SCN IS 2"
2158 B$ = INKEY$:  IF B$ = "" THEN 2158
2160 IF B$ = "Y" OR B$ = "y" THEN NEWMOTOR=1 ELSE NEWMOTOR = 0
2168 LOCATE 13,21:PRINT"1:   No MT connected                    "
2170 LOCATE 15,21:PRINT"2:   RS-232 Remote control"
2200 LOCATE 17,21:PRINT"3:   GPIB Remote control"
2230 LOCATE 19,21:PRINT"4:   EXIT Program."
2260 B$=INKEY$:IF B$=""THEN 2260
2290 IF B$="1" THEN 24730
2320 IF B$="2" THEN 25060
2350 IF B$="3" THEN 25600
2380 IF B$="4" THEN 26140
2410 GOTO 2050
2440 REM
2470 REM  ---------- MAIN MENU ----------------
2500 REM
2530 CLS
2560 LOCATE 3,22:PRINT"MT-9500 CONTROL PROGRAM"
2590 LOCATE 4,22:PRINT"-----------------------"
2620 LOCATE 7,22:PRINT"1.   SET TIME and DATE"
2650 LOCATE 8,22:PRINT"2.   FORMFEED"
2680 LOCATE 9,22:PRINT"3.   CALIBRATE"
2710 LOCATE 10,22:PRINT"4.   LINE PRINTER"
2740 LOCATE 11,22:PRINT"5.   REAL TIME OSCILLOGRAPH"
2770 LOCATE 12,22:PRINT"6.   TRANSIENT CAPTURE"
2800 LOCATE 13,22:PRINT"7.   TEST FREQUENCY RESPONSE
2830 LOCATE 14,22:PRINT"8.   AUTO TEST"
2860 LOCATE 15,22:PRINT"9.   DISPLAY OR CHANGE ANNOTATION"
2890 PRINT:PRINT "                          Choose a number (or X to exit)";
2920 NU$=INKEY$
2950 REM                  1    2    3    4    5    6    7    8    9
2980 ON VAL(NU$) GOTO  3130,8830,4960,7060,9040,10990,17350,19510,22420
3010 IF NU$="X" THEN GOTO 26140
3040 GOTO 2920
3070 REM
3100 REM
3130 REM ---- Read and set MT time (here from MAIN MENU) -----
3160 REM
3190 IF NOMT%=1 THEN GOTO 2530                  'skip if no MT
```

```
3220 WRT$=CHR$(&H1B)+"E"                          'set time (ESC E)
3250 V%=7
3280 CALL IBTMO (GPIB0%,V%)                       'change GPIB timeout
3310 GOSUB 27790                                    'send MT cmd
3340 V%=15
3370 CALL IBTMO (GPIB0%,V%)                       'reset GPIB timeout
3400 CLS:GOSUB 26380                                'put time in T$
3430 CLS
3460 T$=MID$(T$,5,8)
3490 TIME$=T$
3520 LOCATE 11,26:PRINT"The current TIME is...."+T$
3550 LOCATE 13,16:PRINT"Enter new TIME or <Carriage Return> if no change ";
3580 LOCATE 15,35:PRINT"HH:MM<CR>";:LOCATE 16,33:INPUT T$
3610 WRT$=T$+CHR$(&HD):GOSUB 27790                  'send time to MT
3640 GOSUB 27280:IF A$=CHR$(&H11) THEN 3760 ELSE 3670
3670 LOCATE 18,26:PRINT"*** BAD TIME, try again. ***";:FOR I = 1 TO 1500
3700 LOCATE 18,26:PRINT"                                          ";:GOTO 3550
3730 REM IF T$="" THEN 3920 ELSE TIME$=T$
3760 GOSUB 28240     'LOOK FOR AN 1H
3790 REM
3820 REM ---------- Read and set date ---------------
3850 REM
3880 WRT$=CHR$(&H1B)+"D":GOSUB 27790        'set date cmd (ESC D)
3910 CLS:GOSUB 26860
3940 A$=D$:CLS
3970 DAY$=LEFT$(A$,2)
4000 A$=RIGHT$(A$,6)
4030 MONTH$=LEFT$(A$,3)
4060 YEAR$=RIGHT$(A$,2)
4090 IF MONTH$="JAN" THEN MONTH$="01"
4120 IF MONTH$="FEB" THEN MONTH$="02"
4150 IF MONTH$="MAR" THEN MONTH$="03"
4180 IF MONTH$="APR" THEN MONTH$="04"
4210 IF MONTH$="MAY" THEN MONTH$="05"
4240 IF MONTH$="JUN" THEN MONTH$="06"
4270 IF MONTH$="JUL" THEN MONTH$="07"
4300 IF MONTH$="AUG" THEN MONTH$="08"
4330 IF MONTH$="SEP" THEN MONTH$="09"
4360 IF MONTH$="OCT" THEN MONTH$="10"
4390 IF MONTH$="NOV" THEN MONTH$="11"
4420 IF MONTH$="DEC" THEN MONTH$="12"
4450 A$ = MONTH$+"-"+DAY$+"-"+YEAR$
4480 REM DATE$=A$
4510 LOCATE 11,24:PRINT"The current DATE is...."+D$
4540 LOCATE 13,16:PRINT"Enter new DATE or <Carriage Return> if no change ";
4570 LOCATE 15,35:PRINT"MM/DD/YY<CR>":LOCATE 16,33:INPUT D$
4600 WRT$=D$+CHR$(&HD):GOSUB 27790
4630 GOSUB 27280
4660 IF A$=CHR$(&H5) THEN 4780 ELSE IF A$=CHR$(&H11) THEN  4690 ELSE 4660
4690 IF D$="" THEN 4720 ELSE DATE$=D$
4720 GOSUB 28240
4750 GOTO 2530
4780 LOCATE 18,26:PRINT"*** BAD DATE, try again. ***";:FOR I = 1 TO 1500
4810 LOCATE 18,26:PRINT"                                          ";:GOTO 4540
4840 REM
4870 REM
4900 LOCATE 25,1:PRINT"**** ERROR NUMBER ";ERR," IN LINE ";ERL:END
4930 REM
4960 REM -------------- Calibrate ---------------------
4990 REM
5020 CLS
5050 LOCATE 8,3:PRINT"**** MT9500 CALIBRATION ****";
5080 LOCATE 11,3:PRINT"set all inputs to 0 volts (short)"
5110 LOCATE 12,3:PRINT"set all ZERO knobs so mark is up"
5140 LOCATE 13,3:PRINT"press any key when done"
5170 M$=INKEY$:IF M$="" THEN 5170
```



```
5200 IF NOMT%=1 THEN GOTO 6190
5230 WRT$=CHR$(&H1B)+"H":GOSUB 27790        'put MT in mode
5260 WRT$=CHR$(&HD):GOSUB 27790             'THROW AWAY FIRST SET OF POINTS
5290  FOR I= 1 TO 8
5320    GOSUB 27280:LOW(I)=ASC(A$)
5350    GOSUB 27280:HIGH(I)=ASC(A$)
5380  NEXT
5410 WRT$=CHR$(&HD):GOSUB 27790             'get initial points
5440  FOR I= 1 TO 8
5470    GOSUB 27280:LOW(I)=ASC(A$)
5500    GOSUB 27280:HIGH(I)=ASC(A$)
5530    AVG(I)=HIGH(I)*256 + LOW(I)
5560  NEXT
5590 FOR J=1 TO 4                           'get 4 more sets and average
5620  WRT$=CHR$(&HD):GOSUB 27790              'request new data packet
5650  FOR I= 1 TO 8
5680    GOSUB 27280:LOW(I)=ASC(A$)
5710    GOSUB 27280:HIGH(I)=ASC(A$)
5740    AVG(I)=AVG(I) + HIGH(I)*256 + LOW(I)
5770  NEXT
5800 NEXT
5830 FOR I=1 TO 8:AVG(I)=INT(AVG(I)/5):NEXT   'save avg baseline for each ch
5860 J=0:PRINT
5890 FOR I=1 TO 8
5920  IF AVG(I) > 1250 THEN PRINT "ch ",I," is not centered":J=1
5950  IF AVG(I) < 800  THEN PRINT "ch ",I," is not centered":J=1
5980 NEXT
6010 IF J=0 THEN GOTO 6190
6040 PRINT"adjust and hit any key"
6070 PRINT:PRINT"if pot cannot be centered chan may be defective"
6100 M$=INKEY$:IF M$="" THEN GOTO 6100
6130 CLS
6160 GOTO 5410
6190 CLS:LOCATE 14,3:PRINT"set all chan to CAL - DO NOT MOVE ZERO"
6220 LOCATE 15,3:PRINT"apply .2 volts to inputs"
6250 LOCATE 16,3:PRINT"adjust gain trim pots until all channels show OK (640)";
6280 LOCATE 17,3:PRINT"press any key when done";
6310 LOCATE 20,1
6340 PRINT"   CHN #1    CHN #2    CHN #3    CHN #4    CHN #5    CHN #6    CHN #7
6370 IF NOMT%=1 THEN GOTO 6670
6400 WRT$=CHR$(&HD):GOSUB 27790              'request new data packet
6430 FOR I= 1 TO 8
6460  GOSUB 27280:LOW(I)=ASC(A$)
6490  GOSUB 27280:HIGH(I)=ASC(A$)
6520 NEXT
6550 LOCATE 22,3 :I=1:GOSUB 6850:LOCATE 22,12:I=2:GOSUB 6850
6580 LOCATE 22,22:I=3:GOSUB 6850:LOCATE 22,31:I=4:GOSUB 6850
6610 LOCATE 22,41:I=5:GOSUB 6850:LOCATE 22,50:I=6:GOSUB 6850
6640 LOCATE 22,60:I=7:GOSUB 6850:LOCATE 22,69:I=8:GOSUB 6850
6670 NU$=INKEY$:IF NU$="" THEN 6370 ELSE 6700
6700 IF NOMT%=1 THEN GOTO 2530
6730 WRT$=CHR$(&H18):GOSUB 27790
6760 GOSUB 28240
6790 GOTO 2530
6820 REM                          'subroutine
6850 VA=HIGH(I)*256 + LOW(I)
6880 REM   CHART WIDTH = 1280   THEREFORE   +.2 V = 640 + AVG
6910 PRINT VA-AVG(I);
6940 IF VA > (643+AVG(I)) THEN PRINT"  ":RETURN
6970 IF VA < (637+AVG(I)) THEN PRINT"  ":RETURN
7000 PRINT"OK":RETURN                     'ok if .2 v between 637 and 643
7030 REM
7060 REM ---------- Line printer ---------------
7090 REM
7120 CLS:LOCATE 4,25
7150 PRINT"MT-9500 PRINT TEST - choose a mode"
```

```
7240 LOCATE 10,20:PRINT"2. Compressed screen print format."
7270 A$=INKEY$:IF A$=""THEN 7270
7300 IF (A$="1") OR (A$="2") THEN 7360
7330 GOTO 7270
7360 CLS:LOCATE 4,21
7390 PRINT"1. LINE PRINT FORMAT"
7420 LOCATE 6,21:PRINT"2. PAGE PRINT FORMAT"
7450 B$=INKEY$:IF B$="" THEN 7450
7480 IF B$="1" OR B$="2" THEN 7540
7510 GOTO 7360
7540 IF A$="1" THEN 7630
7570 WRT$=CHR$(&H1B)+"S"+B$          'ESC S x  for compressed
7600 GOTO 7660
7630 WRT$=CHR$(&H1B)+"P"+B$          'ESC P x for standard
7660 CLS
7690 LOCATE 10,26:PRINT"Enter Command or File name"
7720 LOCATE 12,34:PRINT STRING$(12," ")
7750 LOCATE 14,21:PRINT" EX to Exit"
7780 LOCATE 16,21:PRINT" DIRA - directory of Drive A"
7810 LOCATE 17,21:PRINT" DIRB - directory of Drive B"
7840 LOCATE 18,21:PRINT" DIRC - directory of Drive C"
7870 LOCATE 12,32:INPUT FILE$
7900 IF FILE$="" THEN 7660
7930 IF FILE$="EX" OR FILE$="ex" THEN 2530
7960 IF FILE$="DIRA" OR FILE$="dira" THEN 8080
7990 IF FILE$="DIRB" OR FILE$="dirb" THEN 8140
8020 IF FILE$="DIRC" OR FILE$="dirc" THEN 8200
8050 GOTO 8290
8080 CLS:LOCATE 1,1:FILES "A:"          'directory of A
8110 GOTO 8230
8140 CLS:LOCATE 1,1:FILES "B:"          'directory of B
8170 GOTO 8230
8200 CLS:LOCATE 1,1:FILES "C:"          'directory of C
8230 LOCATE 25,18:PRINT"Press any Key to exit";
8260 L$=INKEY$:IF L$="" THEN 8260 ELSE GOTO 7660
8290 IF NOMT%=1 THEN GOTO 2530
8320 GOSUB 27790                    'send cmd string to enter mode
8350 CLS:LOCATE 18,27:PRINT"Press 'X' to End Printout"
8380 LOCATE 9,27:PRINT "Printout in progress"
8410 OPEN FILE$ FOR INPUT AS #2
8440 IF EOF(2) THEN 8710
8470 LINE INPUT #2,A$
8500 IF IEEEFLAG%=1 THEN 8590
8530 PRINT #1,A$+CHR$(&HD)+CHR$(&HA);:M$=INKEY$
8560 GOTO 8680
8590 WRT$=A$+CHR$(&HD)+CHR$(&HA)
8620 CALL IBWRT (GPIB0%,WRT$)
8650 M$=INKEY$
8680 IF M$="" THEN 8440 ELSE IF M$="X" OR M$="x" THEN 8710 GOTO 8440
8710 M$="":CLOSE #2:PRINT"ABORTED":WRT$=CHR$(&HB):GOSUB 27790
8740 GOSUB 28180 'WAIT  FOR 1
8770 GOTO 2530
8800 REM
8830 REM ---------Formfeed --------------------
8860 REM
8890 IF NOMT%=1 THEN GOTO 2530
8920 WRT$=CHR$(&H1B)+"F":GOSUB 27790
8950 GOSUB 28150  'wait for an 01H
8980 GOTO 2530   'go back to MAIN MENU
9010 REM
9040 REM ----------Realtime oscillograph------
9070 REM
9100 IF NOMT%=1 THEN GOTO 9580
9130 SPEED% = 25:  SPR$="1":  SP1$ = "025"      'set default speed
9220 WRT$=CHR$(&H18):GOSUB 27760:GOSUB 28180                'exit set up
9250 WRT$=CHR$(&H1B)+"R"+"8":GOSUB 27760:GOSUB 28420        'enter non-overlap
9251 IF AP95=0 GOTO 9370              'AP-95 NOT INSTALLED
9280 CLS:LOCATE 10,10:PRINT"LOADING BUFFERS ... PLEASE WAIT"
9310 GOSUB 29470                      'LOAD TEXT BUFFERS
9340 WRT$=CHR$(&H15):GOSUB 27760
9370 HALT%=0:OVLP%=0
9400 GOSUB 29200                          'set default speed
9550 WRT$=CHR$(&H13):GOSUB 27760                  'start recorder
9580 CLS:LOCATE 3,13:PRINT"REAL TIME OSCILLOGRAPH"   'show REALTIME options
9610 LOCATE 10,19:PRINT"1. run 40 mm ch mode"
9640 LOCATE 11,19:PRINT"2. run 160 mm ch mode"
9650 IF OM95=1 GOTO 9670
9660 LOCATE 11,19:PRINT"2. NOT ACTIVE (160 mm ch mode not installed)"
9670 LOCATE 13,19:PRINT"3. stop recorder"
9700 LOCATE 14,19:PRINT"4. change speed"
9730 LOCATE 18,19:PRINT"5. return to main menu"
9760 LOCATE 23,19:PRINT"enter a number: "
9790 M$=INKEY$:IF M$="" THEN 9790
9820 IF NOMT%=1 THEN GOTO 2530
9850 IF M$="5" THEN GOTO 10390
9880 IF M$="4" THEN GOTO 10450
9910 IF M$="3" THEN GOTO 10030
9940 IF M$="2" THEN GOTO 10200
9970 IF M$="1" THEN GOTO 10150
10000 GOTO 9790
10030 REM
10060 IF HALT%=1 THEN GOTO 9580 ELSE HALT%=1
10090 WRT$=CHR$(&H13):GOSUB 27760:GOTO 9580     'send halt
10120 REM
10150 WRT$=CHR$(&H18):GOSUB 27760:GOSUB 28180  'exit mode
10180 GOTO 9250                                  'enter non-overlap mode
10200 IF OM95=1 GOTO 10210              'overlap installed
10202 GOTO 9580
10210 WRT$=CHR$(&H18):GOSUB 27760:GOSUB 28180          'exit mode
10240 WRT$=CHR$(&H1B)+"R"+"2":GOSUB 27760:GOSUB 28420  'enter overlap mode
10241 IF AP95=0 THEN GOTO 10360
10270 CLS:LOCATE 10,10:PRINT"LOADING BUFFERS ... PLEASE WAIT"
10300 GOSUB 29470                      'LOAD TEXT BUFFERS
10330 WRT$=CHR$(&H15):GOSUB 27760
10360 HALT%=0:OVLP%=1:GOTO 9400
10390 WRT$=CHR$(&H18):GOSUB 27760:GOSUB 28180:GOTO 2530  'exit - goto Main Menu
10420 REM
10450 IF NEWMOTOR = 1 THEN GOTO 40000
10460 CLS:PRINT"enter number to choose range"
10480 PRINT:PRINT"  1. mm/sec"
10510 PRINT"  2. mm/min"
10540 PRINT"  3. mm/hr"
10570 SPR$=INKEY$
10600 IF SPR$="1" THEN CLS:PRINT"range is mm/sec":GOTO 10720
10630 IF SPR$="2" THEN CLS:PRINT"range is mm/min":GOTO 10720
10660 IF SPR$="3" THEN CLS:PRINT"range is mm/hr": GOTO 10720
10690 GOTO 10570      'bad entry
10720 PRINT:INPUT"enter speed  ",SPEED%
10730 IF F200=1 AND SPEED%=200 THEN 10780
10750 IF SPEED% > 100 OR SPEED% < 1 THEN GOTO 10720
10780 WRT$=CHR$(&HE):GOSUB 27760       'send set speed cmd
10810 SD!=62500!/SPEED%                'convert speed to MT timer format
10840 SP$=HEX$(SD!):A$=SPACE$(4):RSET A$=SP$:WRT$=A$
10870 GOSUB 27760:GOSUB 28420        'format and send speed (4 bytes)
10900 WRT$=SPR$:GOSUB 27760:GOSUB 28420  'send range
10930 GOTO 9580
10960 REM
10990 REM ----Transient capture----
```

```
11020 REM
11050 CLS:LOCATE 3,13:PRINT"TRANSIENT CAPTURE"
11052 IF DC95=1 GOTO 11080
11054 LOCATE 10,19:PRINT"DC-95 OPTION NOT INSTALLED"
11056 LOCATE 12,19:PRINT"PRESS ANY KEY TO RETURN"
11058 M$=INKEY$:IF M$="" THEN 11058
11059 GOTO 2530
11080 RES$="10":WND$="03":TPOS$="1":TCH$="1"
11110 IF NOMT%=1 GOTO 11140 ELSE GOSUB 30070  'set recorder to default
11140 LOCATE 10,19:PRINT"1. acquire snapshot"
11170 LOCATE 11,19:PRINT"2. playback from MT memory"
11200 LOCATE 12,19:PRINT"3. playback from disk"
11230 LOCATE 13,19:PRINT"4. save MT memory on disk"
11260 LOCATE 15,19:PRINT"5. return to main menu"
11290 LOCATE 23,19:PRINT"enter a number: "
11320 M$=INKEY$:IF M$="" THEN 11320
11350 IF M$="1" GOTO 11560
11380 IF M$="2" GOTO 16630
11410 IF M$="3" GOTO 14290
11440 IF M$="4" THEN GOTO 15430
11470 IF M$="5" THEN GOTO 2530
11500 GOTO 11320
11530 REM
11560 CLS:LOCATE 3,13:PRINT"ACQUIRE SNAPSHOT"
11590 LOCATE 10,19:PRINT"1. start immediate snapshot"
11620 LOCATE 11,19:PRINT"2. start triggered snapshot"
11650 LOCATE 13,19:PRINT"3. show/change number of samples"
11680 LOCATE 14,19:PRINT"4. show/change resolution"
11710 LOCATE 15,19:PRINT"5. show/change trigger settings"
11740 LOCATE 20,19:PRINT"6. exit snapshot menu"
11770 NU$=INKEY$:IF NU$="" THEN 11770
11800 IF NU$="1" THEN GOTO 12010
11830 IF NU$="2" THEN GOTO 12130
11860 IF NU$="3" THEN GOTO 12430
11890 IF NU$="4" THEN GOTO 13000
11920 IF NU$="5" THEN GOTO 13570
11950 IF NU$="6" THEN GOTO 11050
11980 GOTO 11770
12010 IF NOMT%=1 THEN GOTO 11560
12040 CLS:LOCATE 3,13:PRINT"snapshot in progress"
12070 WRT$=CHR$(&H1B)+"M":GOSUB 27760:GOSUB 28180   'take snapshot
12100 GOTO 11050
12130 IF NOMT%=1 THEN GOTO 11560
12160 CLS:LOCATE 3,13:PRINT"triggered snapshot in progress"
12190 WRT$=CHR$(&H1B)+"Z":GOSUB 27760:GOSUB 28420            'enter set up
12220 WRT$=CHR$(&H9)+"+"+CHR$(&HD):GOSUB 27760:GOSUB 28420   'trig on
12250 WRT$=CHR$(&H18):GOSUB 27760:GOSUB 28180                'exit set up
12280 WRT$=CHR$(&H1B)+"M":GOSUB 27760:GOSUB 28180            'take snapshot
12310 WRT$=CHR$(&H1B)+"Z":GOSUB 27760:GOSUB 28420
12340 WRT$=CHR$(&H9)+"-"+CHR$(&HD):GOSUB 27760:GOSUB 28420   'trig off
12370 WRT$=CHR$(&H18):GOSUB 27760:GOSUB 28180
12400 GOTO 11050
12430 CLS:PRINT:PRINT"present window size is "+WND$+" Ksamp"
12460 PRINT:PRINT"choose  1.  1 Ksamp"
12490 PRINT"          2.  3 Ksamp"
12520 PRINT"          3.  5 Ksamp"
12550 PRINT"          4. 10 Ksamp"
12580 PRINT"          5. 16 Ksamp"
12610 PRINT" any other key for no change"
12640 M$=INKEY$: IF M$="" THEN GOTO 12640
12670 IF M$="1" THEN WND$="01":GOTO 12850
12700 IF M$="2" THEN WND$="03":GOTO 12850
12730 IF M$="3" THEN WND$="05":GOTO 12850
12760 IF M$="4" THEN WND$="10":GOTO 12850
12790 IF M$="5" THEN WND$="16":GOTO 12850
12820 GOTO 11560
```



```
12850 IF NOMT%=1 THEN GOTO 12430
12880 WRT$=CHR$(&H1B)+"Z":GOSUB 27760:GOSUB 28420
12910 WRT$=CHR$(4)+"8"+WND$+CHR$(&HD):GOSUB 27760:GOSUB 28420   'change it
12940 WRT$=CHR$(&H18):GOSUB 27760:GOSUB 28180
12970 GOTO 12430
13000 CLS:PRINT:PRINT"present resolution is "+RES$+" msec/mm"
13030 PRINT:PRINT"choose  1.  1 msec/mm"
13060 PRINT"          2.  2 msec/mm"
13090 PRINT"          3.  5 msec/mm"
13120 PRINT"          4. 10 msec/mm"
13150 PRINT"          5. 20 msec/mm"
13180 PRINT" any other key for no change"
13210 M$=INKEY$: IF M$="" THEN GOTO 13210
13240 IF M$="1" THEN RES$="01":GOTO 13420
13270 IF M$="2" THEN RES$="02":GOTO 13420
13300 IF M$="3" THEN RES$="05":GOTO 13420
13330 IF M$="4" THEN RES$="10":GOTO 13420
13360 IF M$="5" THEN RES$="20":GOTO 13420
13390 GOTO 11560
13420 IF NOMT%=1 THEN GOTO 13000
13450 WRT$=CHR$(&H1B)+"Z":GOSUB 27760:GOSUB 28420
13480 WRT$=CHR$(3)+RES$+CHR$(&HD):GOSUB 27760:GOSUB 28420   'change it
13510 WRT$=CHR$(&H18):GOSUB 27760:GOSUB 28180
13540 GOTO 13000
13570 CLS:PRINT:PRINT"present trigger channel is "+TCH$
13600 PRINT:PRINT"enter new trigger channel"
13630 PRINT"or any other key to continue"
13660 M$=INKEY$: IF M$="" THEN GOTO 13660
13690 IF M$>"0" AND M$<"9" THEN TCH$=M$
13720 IF TPOS$="1" THEN WRT$="start"
13750 IF TPOS$="2" THEN WRT$="center"
13780 IF TPOS$="3" THEN WRT$="end"
13810 PRINT:PRINT"present trigger is at "+WRT$+" of trace"
13840 PRINT:PRINT"other trigger settings determined by front panel controls"
13870 PRINT:PRINT"enter 1 for start"
13900 PRINT"      2 for center"
13930 PRINT"      3 for end"
13960 PRINT" any other key for no change"
13990 M$=INKEY$:IF M$="" THEN GOTO 13990
14020 IF M$>"0" AND M$<"4" THEN TPOS$=M$: GOTO 14080
14050 GOTO 11560
14080 IF NOMT%=1 THEN GOTO 13570
14110 WRT$=CHR$(&H1B)+"Z":GOSUB 27760:GOSUB 28420
14140 WRT$=CHR$(5)+TPOS$+CHR$(&HD):GOSUB 27760:GOSUB 28420
14170 WRT$=CHR$(&HB)+TCH$+CHR$(&HD):GOSUB 27760:GOSUB 28420   'change it
14200 WRT$=CHR$(&H18):GOSUB 27760:GOSUB 28180
14230 GOTO 13570
14260 REM
14290 CLS:LOCATE 3,13:PRINT"TRANSFER FROM DISK TO MT"
14320 REM  2 chan transfers not supported
14350 LOCATE 5,13:PRINT"window size of file must be ",+WND$+" Ksamp"
14380 LOCATE 6,13:PRINT"window size can be changed with acquire snapshot menu"
14410 LOCATE 8,13:PRINT"data must be on files MTDATA1.DAT thru MTDATA8.DAT"
14440 LOCATE 9,13:PRINT"enter drive (A,B,C,D): "
14470 GOSUB 30460      'set up file names
14500 GOSUB 16450
14530 LOCATE 14,13:PRINT"enter X to abort - any other key starts transfer"
14560 M$=INKEY$: IF M$="" THEN GOTO 14560
14590 IF M$="x" OR M$="X" THEN GOTO 11050
14620 IF NOMT%=1 OR IEEEFLAG%=0 THEN GOTO 16630
14650 WRT$=CHR$(&H1B)+"V"+FORMAT$: GOSUB 27760: GOSUB 28390
14680 WRT$="8": GOSUB 27760: GOSUB 28390
14710 WRT$=WND$: GOSUB 27760: GOSUB 28390
14740 NUMFILE%=8
14770 FOR I=1 TO NUMFILE%
14800  LOCATE 23,27:PRINT" file #";I;" being transferred"
```

```
14830  CMD$=CHR$(MTLISTEN%)+CHR$(UNT%)+CHR$(ATTALK%)
14860  CALL IBCMD(GPIB0%,CMD$)
14890  IF IBSTA% < 0 THEN 24550     'error routine
14920  V%=0: CALL IBEOT(GPIB0%,V%)
14950  IF IBSTA% < 0 THEN 24550
14980  CALL IBWRTF(GPIB0%,MTFILE$(I))
15010  IF IBSTA% < 0 THEN 24550
15040  V%=1
15070  CALL IBEOT(GPIB0%,V%)
15100  IF IBSTA% < 0 THEN 24550
15130  WRT$=CHR$(&H0):GOSUB 27760:GOSUB 27220   'EOI attached to dummy byte
15160  GOSUB 27220                              'wait for check sum
15190  IF I=NUMFILE% THEN 15250                 'send ok or abort
15220  WRT$=CHR$(&H11): GOSUB 27760: GOTO 15280
15250  WRT$=CHR$(&H18): GOSUB 27760
15280  LOCATE 23,1:PRINT STRING$(79," ");
15310 NEXT
15340 GOSUB 28180                               'wait for 01 from host
15370 GOTO 16630                                'jump to playback menu
15400 REM
15430 CLS:LOCATE 3,13:PRINT"TRANSFER FROM MT TO DISK"
15460 LOCATE 5,13:PRINT"data will be sent to files MTDATA1.DAT thru MTDATA8.DAT"
15490 LOCATE 9,13:PRINT"enter drive (A,B,C,D): "
15520 GOSUB 30460      'set up file names
15550 GOSUB 16450      'get format
15580 IF NOMT%=1 OR IEEEFLAG%=0 THEN GOTO 16630
15610 WRT$=CHR$(&H1B)+"U"+FORMAT$: GOSUB 27730: GOSUB 28390
15640 GOSUB 27220                               'get # of chan from MT (ignore it)
15670 GOSUB 27220: WND$=A$                      'get window size
15700 GOSUB 27220: WND$=WND$+A$
15730 IF WND$="00" THEN GOTO 15820
15760 WRT$=CHR$(&H13):GOSUB 27760                   'start transfer
15790 GOTO 15940
15820 LOCATE 21,13: PRINT"MT9500 has no data"
15850 GOSUB 27220                               'wait for MT to be ready
15880 V=5: GOSUB 29020                          'delay to read msg
15910 GOTO 11050                                'return to menu
15940 FOR I=1 TO 8
15970  V%=&H80
16000  CALL IBEOS(GPIB0%,V%)
16030  CMD$=CHR$(MTTALK%)+CHR$(UNL%)+CHR$(ATLISTEN%)
16060  CALL IBCMD(GPIB0%,CMD$)
16090  IF IBSTA% < 0 THEN 24550
16120  LOCATE 21,13:PRINT"transfer file # ",I
16150  CALL IBRDF(GPIB0%,MTFILE$(I))
16180  IF IBSTA% < 0 THEN 24550
16210  V%=&H40D
16240  CALL IBEOS(GPIB0%,V%)
16270  GOSUB 27220                              'get check sum but don't use it
16300  WRT$=CHR$(&H11): GOSUB 27730             'send ok
16330 NEXT
16360 GOSUB 27220                               'wait for MT
16390 GOTO 11050
16420 REM                                  subroutine
16450 LOCATE 10,13:PRINT"enter 1 for min/max  OR  2 for average"
16480 M$=INKEY$:IF M$="" THEN GOTO 16480
16510 IF M$="1" OR M$="2" THEN GOTO 16570
16540 GOTO 16450
16570 FORMAT$=M$: RETURN
16600 REM
16630 CLS:LOCATE 3,13:PRINT"PLAYBACK MT MEMORY"
16660 RETRY%=1
16690 LOCATE 10,19:PRINT"1. 40 mm channels"
16720 LOCATE 11,19:PRINT"2. 160 mm channels (overlap)"
16730 IF OM=1 GOTO 16750
16740 LOCATE 11,19:PRINT"2. NOT ACTIVE (overlap mode not installed)"
16750 LOCATE 12,19:PRINT"3. X-Y PLOT of channels 1 and 2"
16780 LOCATE 13,19:PRINT"4. numeric listing"
16810 LOCATE 18,19:PRINT"5. change start point of playback"
16840 LOCATE 20,19:PRINT"6. exit playback menu"
16870 NU$=INKEY$:IF NU$="" THEN 16870
16900 IF NU$="1" THEN GOTO 17140
16930 IF NU$="2" THEN GOTO 17140
16960 IF NU$="3" THEN GOTO 17140
16990 IF NU$="4" THEN GOTO 17140
17020 IF NU$="5" THEN GOTO 16870
17050 IF NU$="6" THEN RETRY%=0:GOTO 11050
17080 GOTO 16870                    'bad entry
17110 REM
17140 IF NOMT%=1 THEN GOTO 16630
17170 WRT$=CHR$(&H1B)+"N"+NU$:GOSUB 27790      'send playback cmd
17200 GOSUB 28450
17230 CLS:LOCATE 3,13:PRINT"PLAYBACK IN PROGRESS"
17260 WRT$=CHR$(&H13):GOSUB 27790:GOSUB 28180
17290 GOTO 16630                                'go back to MAIN MENU
17320 REM
17350 REM ----Frequency response test -----
17380 REM
17410 CLS
17440 IF NOMT%=1 THEN GOTO 2530
17470 PRINT:PRINT"Type 1 to run frequency response test"
17500 PRINT:PRINT"Any other key causes return to Main Menu"
17530 M$=INKEY$:IF M$=""GOTO 17530
17560 IF M$="1" THEN GOTO 17620
17590 GOTO 2530                    'Main Menu
17620 MTBUF$=" 20 Hz ":GOSUB 18580
17650 MTBUF$=" 60 Hz ":GOSUB 18580
17680 MTBUF$=" 100 Hz ":GOSUB 18580
17710 GOSUB 30070                                   'set snapshot defaults
17740 MTBUF$=" 100 Hz snapshot"                     'print header
17770 GOSUB 28630
17800 WRT$=CHR$(&H1B)+"M":GOSUB 27760:GOSUB 28180  'take a snapshot
17830 WRT$=CHR$(&H1B)+"N1":GOSUB 27760:GOSUB 28420 'playback non-overlap
17860 WRT$=CHR$(&H13):GOSUB 27760:GOSUB 28180
17890 MTBUF$="1000 Hz":GOSUB 18580
17920 MTBUF$="1000 Hz snapshot"
17950 GOSUB 28630
17980 WRT$=CHR$(&H1B)+"Z":GOSUB 27760:GOSUB 28420  'set snapshot to 1 ms/mm
18010 WRT$=CHR$(3)+"01"+CHR$(&HD):GOSUB 27760:GOSUB 28420
18040 WRT$=CHR$(&H18):GOSUB 27760:GOSUB 28180
18070 WRT$=CHR$(&H1B)+"M":GOSUB 27760:GOSUB 28180   'take snapshot
18100 WRT$=CHR$(&H1B)+"N1":GOSUB 27760:GOSUB 28420  'playback
18130 WRT$=CHR$(&H13):GOSUB 27760:GOSUB 28180
18160 MTBUF$="3000 Hz ":GOSUB 18580
18190 MTBUF$="3000 Hz snapshot"
18220 GOSUB 28630                                   'print header
18250 WRT$=CHR$(&H1B)+"M":GOSUB 27760:GOSUB 28180  'take a snapshot
18280 WRT$=CHR$(&H1B)+"N1":GOSUB 27760:GOSUB 28420 'playback non-overlap
18310 WRT$=CHR$(&H13):GOSUB 27760:GOSUB 28180
18340 MTBUF$="5000 Hz":GOSUB 18580
18370 MTBUF$="5000 Hz snapshot"
18400 GOSUB 28630
18430 WRT$=CHR$(&H1B)+"M":GOSUB 27760:GOSUB 28180   'take snapshot
18460 WRT$=CHR$(&H1B)+"N1":GOSUB 27760:GOSUB 28420  'playback
18490 WRT$=CHR$(&H13):GOSUB 27760:GOSUB 28180
18520 GOTO 17410
18550 REM                          'subroutine
18580 CLS:PRINT"Set input frequecy to ",MTBUF$
18610 PRINT"Make sure chan not set to GND."
18640 PRINT:PRINT"Enter 1 when ready":PRINT"      2 to skip this test"
18670 M$=INKEY$:IF M$="1" THEN GOTO  18760
18700 IF M$="2" THEN RETURN
```

```
18730 GOTO 18670
18760 SPEED% = 25  :SPR$ = "1":  SP1$ = "025"
18790 GOSUB 28630                'print header
18820 WRT$=CHR$(&H1B)+"Z":GOSUB 27760:GOSUB 28420            'enter set up
18850 WRT$=CHR$(&H9)+"-"+CHR$(&HD):GOSUB 27760:GOSUB 28420   'trig off
18880 WRT$=CHR$(&H18):GOSUB 27760:GOSUB 28180                'exit set up
18910 WRT$=CHR$(&H1B)+"R"+"8":GOSUB 27760:GOSUB 28420        'enter non-overlap
18940 GOSUB 29200                        'send speed
19090 WRT$=CHR$(&H13):GOSUB 27760
19120 V=10:GOSUB 29020
19150 WRT$=CHR$(&H13):GOSUB 27760
19180 SPEED% = 100:  SP1$ = "100"
19210 GOSUB 29200                        'send speed
19360 WRT$=CHR$(&H13):GOSUB 27760
19390 V=2:GOSUB 29020
19420 WRT$=CHR$(&H18):GOSUB 27760:GOSUB 28180
19450 RETURN
19480 REM
19510 REM ---- Autotest --------
19540 REM
19570 CLS:LOCATE 3,10:PRINT"AUTOMATIC TEST"
19600 LOCATE 5,10:PRINT"This test requires proper answers to option questions."
19630 LOCATE 7,10:PRINT"If RS-232 is used the digital test is not done."
19660 LOCATE 10,10:PRINT"enter: 1 for long test (xx min)"
19690 LOCATE 11,10:PRINT"       2 for short test "
19692 LOCATE 12,10:PRINT"       3 for long test without 200 mm/sec "
19720 LOCATE 16,10:PRINT"         any other key will exit"
19750 M$=INKEY$:IF M$="" THEN GOTO 19750
19780 IF NOMT%=1 THEN GOTO 2530
19810 IF M$="1" THEN GOTO 19900
19840 IF M$="2" THEN GOTO 22210
19842 IF M$="3" THEN F200=0: GOTO 19900
19870 GOTO 2530      'back to MAIN MENU
19900 CLS:LOCATE 3,10:PRINT"AUTOMATIC TEST IN PROGRESS"
19930 MD$="8"          'start with non-overlap
19960 LOCATE 5,10:PRINT"press space bar to exit"
19990 MTBUF$="REALTIME TEST OF MT9500   25 mm/sec"
20020 GOSUB 28630
20030 IF DC95=0 THEN 20140
20050 WRT$=CHR$(&H1B)+"Z":GOSUB 27760:GOSUB 28420            'enter set up
20080 WRT$=CHR$(&H9)+"-"+CHR$(&HD):GOSUB 27760:GOSUB 28420   'trig off
20110 WRT$=CHR$(&H18):GOSUB 27760:GOSUB 28180                'exit set up
20140 WRT$=CHR$(&H1B)+"R"+MD$:GOSUB 27760:GOSUB 28420        'enter mode
20170 IF AP95=1 THEN GOSUB 29470                          'load text buffers
20200 IF AP95=1 THEN WRT$=CHR$(&H15):GOSUB 27760          'print annotation
20230 WRT$=CHR$(&H13):GOSUB 27760                          'start recorder
20260 V=20:GOSUB 29020                          'wait 20 seconds
20290 WRT$=CHR$(&H18):GOSUB 27760:GOSUB 28180  'exit mode
20310 REM Print line MTBUF$
20320 MTBUF$="SPEED TEST   1, 5, 25, 50, 100, and 200mm/sec"
20350 GOSUB 28630
20380 M$=INKEY$:IF M$=" " THEN GOTO 2530
20410 WRT$=CHR$(&H1B)+"R"+MD$:GOSUB 27760:GOSUB 28420        'enter mode
20440 SPEED% = 1:  SPR$ = "1":  SP1$ = "001":  GOSUB 29200   'set speed
20450 REM Run at 1mm/s for 20s
20451 REM         5mm/s for 20s
20452 REM         25mm/s for 5s
20453 REM         100mm/s for 5s
20454 REM         200mm/s for 5s
20455 REM         500mm/s for 5s
20470 WRT$=CHR$(&H13):GOSUB 27760
20500 V=20:GOSUB 29020
20530 SPEED% = 5 :  SP1$ = "005":  GOSUB 29200          'set speed
20560 V=20:GOSUB 29020
20590 SPEED% = 25:  SP1$ = "025":  GOSUB 29200          'set speed
20620 V=5:GOSUB 29020
20650 SPEED% = 50:  SP1$ = "050":  GOSUB 29200          'set speed
20680 V=5:GOSUB 29020
20710 SPEED% = 100:  SP1$ = "100":  GOSUB 29200         'set speed
20740 V=5:GOSUB 29020
20745 IF F200 = 0 THEN 20770
20750 SPEED% = 200:  SP1$ = "200":  GOSUB 29200         'set speed
20760 V=5: GOSUB 29020
20762 IF NEWMOTOR = 0 THEN 20770
20763 SPEED% = 500:  SP1$ = "500":  GOSUB 29200         'set speed
20766 V = 5:  GOSUB 29020
20770 WRT$=CHR$(&H18):GOSUB 27760:GOSUB 28180  'exit mode
20800 MTBUF$="Motor test  100 mm/sec on/off"
20830 GOSUB 28630
20860 M$=INKEY$:IF M$=" " THEN GOTO 2530
20890 WRT$=CHR$(&H1B)+"R"+MD$:GOSUB 27760:GOSUB 28420        'enter mode
20920 SPEED% = 100:  SPR$ = "1":  SP1$ = "100":  GOSUB 29200    'set speed
20950 FOR I=1 TO 20                        'turn on and off
20980  WRT$=CHR$(&H13):GOSUB 27760
21010  V=1:GOSUB 29020
21040 NEXT
21042 IF F200=0 THEN 21070
21043 SPEED% = 200:  SPR$ = "1":  SP1$ = "200":  GOSUB 29200    'set speed
21045 FOR I=1 TO 10
21046 WRT$=CHR$(&H13):GOSUB 27760
21047 V=2:GOSUB 29020
21048 NEXT
21070 WRT$=CHR$(&H18):GOSUB 27760:GOSUB 28180  'exit mode
21100 MTBUF$="toggle sys ch, sys event, and ID"
21130 GOSUB 28630
21160 M$=INKEY$:IF M$=" " THEN GOTO 2530
21190 WRT$=CHR$(&H1B)+"R"+MD$:GOSUB 27760:GOSUB 28420        'enter mode
21220 IF AP95=1 THEN GOSUB 29470
21250 IF AP95=1 THEN WRT$=CHR$(&H15):GOSUB 27760             'print annotation
21280 WRT$=CHR$(&H13):GOSUB 27760
21310 V=5:GOSUB 29020
21340 WRT$=CHR$(&H13)+CHR$(&O3)+"-":GOSUB 27760    'stop and shut off sys chan
21370 WRT$=CHR$(&H13):GOSUB 27760
21400 V=5:GOSUB 29020
21430 WRT$=CHR$(&O3)+"+":GOSUB 27760
21460 WRT$=CHR$(&O5)+"-":GOSUB 27760                 'shut off sys event
21490 V=5:GOSUB 29020
21520 WRT$=CHR$(&O5)+"+":GOSUB 27760                 'turn on sys event
21550 FOR I=1 TO 20
21580  V=.1:GOSUB 29020
21610  WRT$=CHR$(&HC):GOSUB 27760                    'toggle event state
21640 NEXT
21670 V=1:GOSUB 29020
21700 WRT$=CHR$(&H18):GOSUB 27760:GOSUB 28180
21729 IF DC95=0 THEN 22000
21730 GOSUB 30070                                    'set snapshot defaults
21760 MTBUF$=" snapshot: 10 ms/mm, 3K"
21790 GOSUB 28630                                    'print header
21820 WRT$=CHR$(&H1B)+"M":GOSUB 27760:GOSUB 28180    'take a snapshot
21850 IF MD$="2" THEN GOTO 21940
21880 WRT$=CHR$(&H1B)+"N1":GOSUB 27760:GOSUB 28420   'playback non-overlap
21910 GOTO 21970
21940 WRT$=CHR$(&H1B)+"N2":GOSUB 27760: GOSUB 28420 'playback overlap
21970 WRT$=CHR$(&H13):GOSUB 27760:GOSUB 28180
22000 IF MD$="8" AND OM95=1 THEN MD$="2":GOTO 19990      'retest with overlap
22029 IF DC95=0 THEN 22130
22030 RETRY%=1
22060 WRT$=CHR$(&H1B)+"N3":GOSUB 27760: GOSUB 28420 'playback x-y
22090 WRT$=CHR$(&H13):GOSUB 27760:GOSUB 28180
22120 RETRY%=0
22130 IF DL95=0 THEN 22320
22150 MTBUF$="Data Logger "
```

```
22180 GOSUB 28630
22210 WRT$=CHR$(&H1B)+"T":GOSUB 27760: GOSUB 28420  'data logger
22240 WRT$=CHR$(&H13):GOSUB 27760
22270 V=20: GOSUB 29020
22300 WRT$=CHR$(&H18):GOSUB 27760: GOSUB 28180      'exit mode
22320 IF DI95=0 THEN 22360
22330 IF IEEEFLAG%=1 THEN GOSUB 30910              'test digital modes
22360 GOTO 2530                                     'back to main menu
22390 REM
22420 REM ---------- Edit annotation buffers ------------
22450 REM
22480 CLS
22510 PRINT:PRINT"There is a 60 char text buffer for each channel.  Buffers"
22540 PRINT"are reset to CHANNEL # at the start of the program."
22570 PRINT:PRINT"Except for AUTOTEST, these buffers are displayed during all"
22600 PRINT"recorder modes."
22630 LOCATE 7,3:PRINT BUFF$(1)
22660 LOCATE 9,3:PRINT BUFF$(2)
22690 LOCATE 11,3:PRINT BUFF$(3)
22720 LOCATE 13,3:PRINT BUFF$(4)
22750 LOCATE 15,3:PRINT BUFF$(5)
22780 LOCATE 17,3:PRINT BUFF$(6)
22810 LOCATE 19,3:PRINT BUFF$(7)
22840 LOCATE 21,3:PRINT BUFF$(8)
22870 PRINT:PRINT"enter 1 - 8 to edit   or   9 to exit"
22900 M$=INKEY$: IF M$="" THEN GOTO 22900
22930 IF M$="9" THEN GOTO 2530
22960 IF M$="1" THEN I=1:GOTO 23230
22990 IF M$="2" THEN I=2:GOTO 23230
23020 IF M$="3" THEN I=3:GOTO 23230
23050 IF M$="4" THEN I=4:GOTO 23230
23080 IF M$="5" THEN I=5:GOTO 23230
23110 IF M$="6" THEN I=6:GOTO 23230
23140 IF M$="7" THEN I=7:GOTO 23230
23170 IF M$="8" THEN I=8:GOTO 23230
23200 GOTO 22900
23230 LOCATE (I*2+5),1:PRINT"*"
23260 LOCATE 23,1:PRINT"ENTER ANY VALID CHARACTER OR <CR> TO END EDIT"
23290 J=1                                  'CURSOR
23320 LOCATE (I*2+5),70:PRINT J
23350 M$=INKEY$:IF M$="" THEN GOTO 23350
23380 IF LEN(M$)=2 THEN M$=RIGHT$(M$,1):GOTO 23500
23410 IF M$=CHR$(&HD) THEN GOTO 23710
23440 IF M$>CHR$(31) AND M$<CHR$(123) THEN GOTO 23590
23470 GOTO 23350                'IGNORE BAD CHARACTER
23500 IF M$=CHR$(77) AND J<60 THEN J=J+1:GOTO 23320
23530 IF M$=CHR$(75) AND J>1 THEN J=J-1:GOTO 23320
23560 GOTO 23350
23590 MID$(BUFF$(I),J)=M$
23620 LOCATE (I*2+5),3:PRINT BUFF$(I)
23650 IF J<60 THEN J=J+1
23680 GOTO 23320
23710 REM   end edit
23740 GOTO 22480
23770 REM
23800 REM ------- subroutine to initialize GPIB ------
23830 REM
23860 DEV$="GPIB0"
23890 CALL IBFIND (DEV$,GPIB0%)
23920 IF GPIB0% < 0 THEN 24490
23950 CALL IBSIC (GPIB0%)
23980 IF IBSTA% < 0 THEN 24550
24010 CMD$=CHR$(DCL%)
24040 CALL IBCMD (GPIB0%,CMD$)
24070 IF IBSTA% < 0 THEN 24550
24100 V%=&H40D
```



```
24130 CALL IBEOS (GPIB0%,V%)
24160 IF IBSTA% < 0 THEN 24550
24190 RETURN
24220 REM
24250 REM ---------- subroutine to initialize RS-232 ----
24280 REM
24310 OPEN "COM1:9600,N,8,2,CS,DS12000" AS #1
24340 ON ERROR GOTO 24610
24370 RETURN
24400 REM
24430 REM ------  here on interface init error --------
24460 REM
24490 CLS:COLOR 30,4:LOCATE 25,1:PRINT"**** ERROR IN IBFIND CALL ****";
24520 GOTO 24640
24550 CLS:LOCATE 25,1:PRINT"**** ERROR IN GPIB CALL ****";IBSTA%,IBERR%,IBCNT%
24580 GOTO 24640
24610 CLS:LOCATE 16,31:PRINT"MT-9500 NOT ACTIVE";
24640 STOP
24670 REM
24700 REM
24730 REM ------------ Here on stand alone ---------------
24760 REM
24790 CLS
24820 LOCATE 6,20:PRINT"NO MT ATTACHED       "
24850 LOCATE 7,20:PRINT"--------------------":PRINT:PRINT
24880 PRINT:PRINT
24910 PRINT"                          Press any key for Main menu";
24940 M$=INKEY$:IF M$="" THEN 24940
24970 NOMT%=1
25000 GOTO 2530
25030 REM
25060 REM ------------ Here to set up RS-232 --------------------
25090 REM
25120 CLS
25150 LOCATE 4,15:PRINT"Set Up MT9500 RS-232 Interface"
25180 LOCATE 5,15:PRINT" "
25210 LOCATE 9,15:PRINT"Follow these steps"
25240 LOCATE 11,17:PRINT"1 - Enter SET COMM function on MT by [F2][6][ENTER]."
25270 LOCATE 12,17:PRINT"2 - Scroll to RS-232 and press ENTER."
25300 LOCATE 13,17:PRINT"3 - Scroll to BAUD RATE of 9600 and press ENTER."
25330 LOCATE 14,17:PRINT"4 - MT-9500 will display RS-232."
25360 LOCATE 17,1:PRINT"      The MT-9500 from this point will be controlled by
25390 LOCATE 18,1:PRINT" Only [TIME],[DATE] and the SET COMM function will oper
25420 LOCATE 21,22:PRINT"PRESS ANY KEY TO BEGIN"
25450 M$=INKEY$:IF M$="" THEN 25450
25480 IEEEFLAG%=0:NOMT%=0
25510 GOSUB 24280
25540 GOTO 2530                'goto MAIN MENU
25570 REM
25600 REM ------------ Here to set up GPIB ---------------
25630 REM
25660 CLS
25690 LOCATE 4,15:PRINT"Set Up MT9500 GPIB"
25720 LOCATE 5,15:PRINT" "
25750 LOCATE 9,15:PRINT"Follow these steps"
25780 LOCATE 11,17:PRINT"1 - Enter SET COMM function on MT by [F2][6][ENTER]."
25810 LOCATE 12,17:PRINT"2 - Scroll to GPIB and press ENTER."
25840 LOCATE 13,17:PRINT"3 - Enter valid GPIB address and press ENTER."
25870 LOCATE 14,17:PRINT"4 - MT-9500 will display GPIB."
25900 LOCATE 17,1:PRINT"      The MT-9500 from this point will be controlled by
25930 LOCATE 18,1:PRINT" Only [TIME],[DATE] and the SET COMM function will oper
25960 LOCATE 21,22:PRINT"PRESS ANY KEY TO BEGIN"
25990 M$=INKEY$:IF M$="" THEN 25990
26020 IEEEFLAG%=1:NOMT%=0
26050 GOSUB 23800
26080 GOTO 2530                'goto MAIN MENU
```

```
26110 REM
26140 REM ------------ Here to exit to basic -------------
26170 REM
26200 CLOSE:COLOR 7,0:CLS:END
26230 REM
26260 REM ***************** SUBROUTINES ********************
26290 REM
26320 REM ---------- subroutine to get MT time ---------------------
26350 REM
26380 IF IEEEFLAG%=0 THEN 26650
26410 T$=SPACE$(20)
26440 CMD$=CHR$(MTTALK%)+CHR$(UNL%)+CHR$(ATLISTEN%)
26470 CALL IBCMD (GPIB0%,CMD$)
26500 IF IBSTA% < 0 THEN 24550
26530 CALL IBRD (GPIB0%,T$)
26560 IF IBSTA% < 0 THEN 24550
26590 RETURN
26620 REM
26650 ON ERROR GOTO 4900
26680 LINE INPUT #1,T$
26710 ON ERROR GOTO 4900
26740 RETURN
26770 REM
26800 REM -------- subroutine to get MT date ------------------------
26830 REM
26860 IF IEEEFLAG%=0 THEN 27160
26890 REM
26920 D$=SPACE$(20)
26950 CMD$=CHR$(MTTALK%)+CHR$(UNL%)+CHR$(ATLISTEN%)
26980 CALL IBCMD (GPIB0%,CMD$)
27010 IF IBSTA% < 0 THEN 24550
27040 CALL IBRD (GPIB0%,D$)
27070 IF IBSTA% < 0 THEN 24550
27100 RETURN
27130 REM
27160 LINE INPUT #1,D$
27190 RETURN
27220 REM ----- subroutine to get a byte from host ----
27250 REM
27280    IF IEEEFLAG%=0 THEN 27580
27310    A$=SPACE$(1)
27340    CMD$=CHR$(MTTALK%)+CHR$(UNL%)+CHR$(ATLISTEN%)
27370    CALL IBCMD (GPIB0%,CMD$)
27400    IF IBSTA% < 0 THEN 24550
27430    CALL IBRD (GPIB0%,A$)
27460    IF IBSTA% < 0 AND RETRY%=1 THEN GOTO 27430  'try again
27490    IF IBSTA% < 0 THEN 24550
27520 RETURN
27550 REM
27580 ENDIT$=""
27610 IF LOC(1)=0 THEN 27610 ELSE 27640
27640 A$=INPUT$(1,#1)
27670 RETURN
27700 REM
27730 REM --- subroutine to send contents of WRT$ to MT ---
27760 REM
27790 IF IEEEFLAG%=0 THEN 28090
27820 REM
27850   A$=SPACE$(1)
27880   CMD$=CHR$(MTLISTEN%)+CHR$(UNT%)+CHR$(ATTALK%)
27910   CALL IBCMD (GPIB0%,CMD$)
27940   IF IBSTA% < 0 THEN 24550
27970   CALL IBWRT (GPIB0%,WRT$)
28000   IF IBSTA% < 0 THEN 24550
28030 RETURN
28060 REM
```



```
28090 PRINT #1,WRT$;
28120 RETURN
28150 REM
28180 REM ------- WAIT FOR A 1H --------
28210 REM
28240 GOSUB 27220:IF A$=CHR$(&H1) THEN 28330
28270 LOCATE 25,1:PRINT"*** error: recieved a ";A$
28300 GOTO 28240
28330 RETURN
28360 REM
28390 REM --------- WAIT FOR A 11H FOR DATA CHECKING -------
28420 REM
28450 GOSUB 27220   'get a byte from host
28480 IF A$=CHR$(&H11) THEN 28540 ELSE IF A$=CHR$(&H5) THEN 28570
28510 LOCATE 25,1:PRINT"*** ERROR: RECIEVED A ";A$:GOTO 28450
28540 RETURN
28570 GOSUB 27790:GOTO 28450
28600 REM
28630 REM ------- subroutine to print line of text after formfeed ---
28660 REM
28690 WRT$=CHR$(&H1B)+"F":GOSUB 27730:GOSUB 28180
28720 WRT$=CHR$(&H1B)+"P"+"1":GOSUB 27790      'enter line print mode
28750 IF IEEEFLAG%=1 THEN 28870
28780 PRINT #1,MTBUF$+CHR$(&HD)+CHR$(&HA);
28810 PRINT #1,CHR$(&HD)+CHR$(&HA);            'skip a line
28840 GOTO 28930
28870 WRT$=MTBUF$+CHR$(&HD)+CHR$(&HA)+CHR$(&HD)+CHR$(&HA)
28900 CALL IBWRT (GPIB0%,WRT$)
28930 WRT$=CHR$(&HB):GOSUB 27790:GOSUB 28180    'leave line print mode
28960 RETURN
28990 REM
29020 REM ------- WAIT FOR V SECONDS -----------
29050 REM
29080 VV=TIMER
29110 IF (TIMER-VV) > V THEN RETURN
29140 GOTO 29110
29170 REM
29200 REM -------- change speed in realtime mode -----
29230 REM
29260 WRT$=CHR$(&HE):GOSUB 27760      'send set speed cmd
29270 IF NEWMOTOR = 1 THEN 29420      'use new protocol if new motor installed
29290 SD!=62500!/SPEED%               'convert speed to MT timer format
29320 SP$=HEX$(SD!):A$=SPACE$(4):RSET A$=SP$:WRT$=A$
29350 GOSUB 27760:GOSUB 28420         'format and send speed (4 bytes)
29380 WRT$=SPR$:GOSUB 27760:GOSUB 28420  'send range
29410 RETURN
29420 WRT$ = SP1$:  GOSUB 27760                          'send speed
29430 WRT$ = SPR$:  GOSUB 27760                          'send range
29435 WRT$ = CHR$(&HD):  GOSUB 27760:  GOSUB 28420       'send CR, wait for ack
29437 RETURN
29440 REM
29470 REM ------- LOAD TEXT BUFFERS --------------
29500 REM
29530 WRT$=CHR$(&H17) + "1":GOSUB 27730:GOSUB 28390
29560 WRT$=BUFF$(1) + CHR$(&HD):GOSUB 27730:GOSUB 28390
29590 WRT$=CHR$(&H17) + "2":GOSUB 27730:GOSUB 28390
29620 WRT$=BUFF$(2) + CHR$(&HD):GOSUB 27730:GOSUB 28390
29650 WRT$=CHR$(&H17) + "3":GOSUB 27730:GOSUB 28390
29680 WRT$=BUFF$(3) + CHR$(&HD):GOSUB 27730:GOSUB 28390
29710 WRT$=CHR$(&H17) + "4":GOSUB 27730:GOSUB 28390
29740 WRT$=BUFF$(4) + CHR$(&HD):GOSUB 27730:GOSUB 28390
29770 WRT$=CHR$(&H17) + "5":GOSUB 27730:GOSUB 28390
29800 WRT$=BUFF$(5) + CHR$(&HD):GOSUB 27730:GOSUB 28390
29830 WRT$=CHR$(&H17) + "6":GOSUB 27730:GOSUB 28390
29860 WRT$=BUFF$(6) + CHR$(&HD):GOSUB 27730:GOSUB 28390
29890 WRT$=CHR$(&H17) + "7":GOSUB 27730:GOSUB 28390
```

```
29920 WRT$=BUFF$(7) + CHR$(&HD):GOSUB 27730:GOSUB 28390
29950 WRT$=CHR$(&H17) + "8":GOSUB 27730:GOSUB 28390
29980 WRT$=BUFF$(8) + CHR$(&HD):GOSUB 27730:GOSUB 28390
30010 RETURN
30040 REM
30070 REM --------- SET RECORDER PARAMETERS ---------
30100 REM
30130 WRT$=CHR$(&H1B)+"Z":GOSUB 27760:GOSUB 28420              'SET UP MODE
30160 WRT$=CHR$(3)+"10"+CHR$(&HD):GOSUB 27760:GOSUB 28420      '10 MS/MM CAPTURE
30190 WRT$=CHR$(4)+"8"+"03"+CHR$(&HD):GOSUB 27760:GOSUB 28420  '3 KSAMP WINDOW
30220 WRT$=CHR$(5)+"1"+CHR$(&HD):GOSUB 27760:GOSUB 28420       'TRIG AT START
30250 WRT$=CHR$(8)+"1"+CHR$(&HD):GOSUB 27760:GOSUB 28420       'EXP = 1
30280 WRT$=CHR$(9)+"-"+CHR$(&HD):GOSUB 27760:GOSUB 28420       'DISABLE TRIG
30310 WRT$=CHR$(&HB)+"1"+CHR$(&HD):GOSUB 27760:GOSUB 28420     'TRIG CH=1
30340 REM  other settings are left unchanged
30370 WRT$=CHR$(&H18):GOSUB 27760:GOSUB 28180                  'leave setup
30400 RETURN
30430 REM
30460 REM --------- set up disk drive  ------
30490 REM
30520 DISK$=INKEY$: IF DISK$="" THEN GOTO 30520
30550 IF DISK$="A" OR DISK$="B" OR DISK$="C" THEN GOTO 30610
30580 GOTO 30520
30610  MTFILE$(1)=DISK$+":"+"MTDATA1.DAT"
30640  MTFILE$(2)=DISK$+":"+"MTDATA2.DAT"
30670  MTFILE$(3)=DISK$+":"+"MTDATA3.DAT"
30700  MTFILE$(4)=DISK$+":"+"MTDATA4.DAT"
30730  MTFILE$(5)=DISK$+":"+"MTDATA5.DAT"
30760  MTFILE$(6)=DISK$+":"+"MTDATA6.DAT"
30790  MTFILE$(7)=DISK$+":"+"MTDATA7.DAT"
30820  MTFILE$(8)=DISK$+":"+"MTDATA8.DAT"
30850 RETURN
30880 REM
30910 REM ----------- test digital data modes ----------
30940 MTBUF$="synchronized digital test"
30970 GOSUB 28630
31000 WRT$=CHR$(&H1B)+"G3":GOSUB 27760:GOSUB 28420  'enter synch mode
31030 REM
31060 CMD$=CHR$(MTLISTEN%)+CHR$(UNT%)+CHR$(ATTALK%)
31090 FOR I=1 TO 64
31120 WRT$="D "+"AAAAAAAAAAAAAAAAAAAAAAAAAAAAAAAA"
31150 CALL IBCMD(GPIB0%,CMD$)
31180 CALL IBWRT(GPIB0%,WRT$):CALL IBWRT(GPIB0%,WRT$)
31210 CALL IBWRT(GPIB0%,WRT$):CALL IBWRT(GPIB0%,WRT$)
31240 CALL IBWRT(GPIB0%,WRT$):CALL IBWRT(GPIB0%,WRT$)
31270 CALL IBWRT(GPIB0%,WRT$):CALL IBWRT(GPIB0%,WRT$)
31300 CALL IBWRT(GPIB0%,WRT$):CALL IBWRT(GPIB0%,WRT$)
31330 CALL IBWRT(GPIB0%,WRT$):CALL IBWRT(GPIB0%,WRT$)
31360 CALL IBWRT(GPIB0%,WRT$):CALL IBWRT(GPIB0%,WRT$)
31390 CALL IBWRT(GPIB0%,WRT$):CALL IBWRT(GPIB0%,WRT$)
31420 CALL IBWRT(GPIB0%,WRT$):CALL IBWRT(GPIB0%,WRT$)
31450 CALL IBWRT(GPIB0%,WRT$):CALL IBWRT(GPIB0%,WRT$)
31480 CALL IBWRT(GPIB0%,WRT$):CALL IBWRT(GPIB0%,WRT$)
31510 CALL IBWRT(GPIB0%,WRT$):CALL IBWRT(GPIB0%,WRT$)
31540 CALL IBWRT(GPIB0%,WRT$):CALL IBWRT(GPIB0%,WRT$)
31570 CALL IBWRT(GPIB0%,WRT$):CALL IBWRT(GPIB0%,WRT$)
31600 CALL IBWRT(GPIB0%,WRT$):CALL IBWRT(GPIB0%,WRT$)
31630 CALL IBWRT(GPIB0%,WRT$):CALL IBWRT(GPIB0%,WRT$)
31660 WRT$="D "+"ZZZZZZZZZZZZZZZZZZZZZZZZZZZZZZZZ"
31690 CALL IBCMD(GPIB0%,CMD$)
31720 CALL IBWRT(GPIB0%,WRT$):CALL IBWRT(GPIB0%,WRT$)
31750 CALL IBWRT(GPIB0%,WRT$):CALL IBWRT(GPIB0%,WRT$)
31780 CALL IBWRT(GPIB0%,WRT$):CALL IBWRT(GPIB0%,WRT$)
31810 CALL IBWRT(GPIB0%,WRT$):CALL IBWRT(GPIB0%,WRT$)
31840 CALL IBWRT(GPIB0%,WRT$):CALL IBWRT(GPIB0%,WRT$)
31870 CALL IBWRT(GPIB0%,WRT$):CALL IBWRT(GPIB0%,WRT$)
31900 CALL IBWRT(GPIB0%,WRT$):CALL IBWRT(GPIB0%,WRT$)
31930 CALL IBWRT(GPIB0%,WRT$):CALL IBWRT(GPIB0%,WRT$)
31960 CALL IBWRT(GPIB0%,WRT$):CALL IBWRT(GPIB0%,WRT$)
31990 CALL IBWRT(GPIB0%,WRT$):CALL IBWRT(GPIB0%,WRT$)
32020 CALL IBWRT(GPIB0%,WRT$):CALL IBWRT(GPIB0%,WRT$)
32050 CALL IBWRT(GPIB0%,WRT$):CALL IBWRT(GPIB0%,WRT$)
32080 CALL IBWRT(GPIB0%,WRT$):CALL IBWRT(GPIB0%,WRT$)
32110 CALL IBWRT(GPIB0%,WRT$):CALL IBWRT(GPIB0%,WRT$)
32140 CALL IBWRT(GPIB0%,WRT$):CALL IBWRT(GPIB0%,WRT$)
32170 CALL IBWRT(GPIB0%,WRT$):CALL IBWRT(GPIB0%,WRT$)
32200 NEXT I
32230 REM
32260 WRT$="C"+CHR$(&H18):GOSUB 27760:GOSUB 28180   'exit mode
32290 MTBUF$="unsynchronized test"
32320 GOSUB 28630
32350 WRT$=CHR$(&H1B)+"I3":GOSUB 27760:GOSUB 28420  'enter unsynch mode
32380 WRT$="C"+CHR$(&H13):GOSUB 27760
32410 CMD$=CHR$(MTLISTEN%)+CHR$(UNT%)+CHR$(ATTALK%)
32440 FOR I= 1 TO 18
32441 WRT$="D "+"AAAAAAAAAAAAAAAAAAAAAAAAAAAAAAAA"
32442 CALL IBCMD(GPIB0%,CMD$)
32470 CALL IBWRT(GPIB0%,WRT$):CALL IBWRT(GPIB0%,WRT$)
32500 CALL IBWRT(GPIB0%,WRT$):CALL IBWRT(GPIB0%,WRT$)
32530 CALL IBWRT(GPIB0%,WRT$):CALL IBWRT(GPIB0%,WRT$)
32560 CALL IBWRT(GPIB0%,WRT$):CALL IBWRT(GPIB0%,WRT$)
32590 CALL IBWRT(GPIB0%,WRT$):CALL IBWRT(GPIB0%,WRT$)
32620 CALL IBWRT(GPIB0%,WRT$):CALL IBWRT(GPIB0%,WRT$)
32650 CALL IBWRT(GPIB0%,WRT$):CALL IBWRT(GPIB0%,WRT$)
32680 CALL IBWRT(GPIB0%,WRT$):CALL IBWRT(GPIB0%,WRT$)
32710 CALL IBWRT(GPIB0%,WRT$):CALL IBWRT(GPIB0%,WRT$)
32740 CALL IBWRT(GPIB0%,WRT$):CALL IBWRT(GPIB0%,WRT$)
32770 CALL IBWRT(GPIB0%,WRT$):CALL IBWRT(GPIB0%,WRT$)
32800 CALL IBWRT(GPIB0%,WRT$):CALL IBWRT(GPIB0%,WRT$)
32830 CALL IBWRT(GPIB0%,WRT$):CALL IBWRT(GPIB0%,WRT$)
32860 CALL IBWRT(GPIB0%,WRT$):CALL IBWRT(GPIB0%,WRT$)
32890 CALL IBWRT(GPIB0%,WRT$):CALL IBWRT(GPIB0%,WRT$)
32920 CALL IBWRT(GPIB0%,WRT$):CALL IBWRT(GPIB0%,WRT$)
32951 CMD$=CHR$(MTLISTEN%)+CHR$(UNT%)+CHR$(ATTALK%)
32952 WRT$="D "+"ZZZZZZZZZZZZZZZZZZZZZZZZZZZZZZZZ"
32954 CALL IBCMD(GPIB0%,CMD$)
32955 CALL IBWRT(GPIB0%,WRT$):CALL IBWRT(GPIB0%,WRT$)
32956 CALL IBWRT(GPIB0%,WRT$):CALL IBWRT(GPIB0%,WRT$)
32957 CALL IBWRT(GPIB0%,WRT$):CALL IBWRT(GPIB0%,WRT$)
32958 CALL IBWRT(GPIB0%,WRT$):CALL IBWRT(GPIB0%,WRT$)
32959 CALL IBWRT(GPIB0%,WRT$):CALL IBWRT(GPIB0%,WRT$)
32960 CALL IBWRT(GPIB0%,WRT$):CALL IBWRT(GPIB0%,WRT$)
32961 CALL IBWRT(GPIB0%,WRT$):CALL IBWRT(GPIB0%,WRT$)
32962 CALL IBWRT(GPIB0%,WRT$):CALL IBWRT(GPIB0%,WRT$)
32963 CALL IBWRT(GPIB0%,WRT$):CALL IBWRT(GPIB0%,WRT$)
32964 CALL IBWRT(GPIB0%,WRT$):CALL IBWRT(GPIB0%,WRT$)
32965 CALL IBWRT(GPIB0%,WRT$):CALL IBWRT(GPIB0%,WRT$)
32966 CALL IBWRT(GPIB0%,WRT$):CALL IBWRT(GPIB0%,WRT$)
32967 CALL IBWRT(GPIB0%,WRT$):CALL IBWRT(GPIB0%,WRT$)
32968 CALL IBWRT(GPIB0%,WRT$):CALL IBWRT(GPIB0%,WRT$)
32969 CALL IBWRT(GPIB0%,WRT$):CALL IBWRT(GPIB0%,WRT$)
32970 CALL IBWRT(GPIB0%,WRT$):CALL IBWRT(GPIB0%,WRT$)
32971 NEXT I
33430 REM
33460 WRT$="C"+CHR$(&H18):GOSUB 27760:GOSUB 28180   'exit mode
33490 RETURN
40000 CLS:  LOCATE 23,5:  PRINT STRING$(70," ");
40007 LOCATE 25,20:  PRINT STRING$(30," ");
40010 LOCATE 23,15:  PRINT"  1.  mm/sec"
40020 LOCATE 23,35:  PRINT"  2.  mm/min"
40030 LOCATE 23,55:  PRINT"  3.  mm/hr"
40035 LOCATE 25,32:  PRINT"Choose a number          <CR>";
```

```
40040 A$ = INKEY$:  IF A$ = "" THEN 40040
40050 IF A$ = CHR$(&HD) THEN 40090
40060 IF A$ = CHR$(&H8) THEN A$ = "":  LOCATE 25,49:  PRINT A$;"  ":GOTO 40040
40070 IF A$ < "1" OR A$ > "3" THEN 40040
40080 LOCATE 25,49:  PRINT A$;:  RG$ = A$:  GOTO 40040
40090 A$ = "0":  B$ = "0":  C$ = "0"
40100 CLS:  LOCATE 3,20:  PRINT"MT9500 Real Time Speed Control"
40110 LOCATE 4,20:  PRINT"-------------------------"
40120 LOCATE 22,5:  PRINT STRING$(70,"-");
40130 LOCATE 25,5:  PRINT STRING$(70,"-");
40140 LOCATE 21,32:  PRINT"Set motor speed";
40150 LOCATE 23,16:  PRINT"Enter a number from 1 to 200 or 500 to set the speed"©
40160 LOCATE 25,35:  PRINT"Speed =      <CR>";
40170 WRT$ = CHR$(&HE):  GOSUB 27760    'send command to MT
40180 REM ----- get first digit -----
40190 Z$ = INKEY$
40200 IF Z$ < "0" OR Z$ > "9" THEN 40190 ELSE LOCATE 25,43:  A$ = Z$:  PRINT A$;
40210 REM ----- get second digit -----
40220 Z$ = INKEY$
40230 IF Z$ = CHR$(&HD) THEN C$ = A$:  B$ = "0":  A$ = "0":  GOTO 40310
40240 IF Z$ < "0" OR Z$ > "9" THEN 40220 ELSE LOCATE 25,44: B$ = Z$:  PRINT B$;
40250 REM ----- get third digit -----
40260 Z$ = INKEY$
40270 IF Z$ = CHR$(&HD) THEN C$ = B$:  B$ = A$:  A$ = "0":  GOTO 40310
40280 IF Z$ < "0" OR Z$ > "9" THEN 40260
40290 C$ = Z$
40300 LOCATE 25,45:  PRINT C$;
40310 WRT$ = A$:  GOSUB 27760          'send first digit
40320 WRT$ = B$:  GOSUB 27760          'send second digit
40330 WRT$ = C$:  GOSUB 27760          'send third digit
40340 WRT$ = RG$:  GOSUB 27760         'send range
40350 WRT$ = CHR$(&HD):  GOSUB 27760   'send carriage return
40360 GOSUB 28420                      'wait for acknowledge
40370 GOTO 9580
```

```
10 CLEAR    ,58892!
20     IBINIT1 = 58892!
30     IBINIT2 = IBINIT1 + 3
40     BLOAD "BIB.M",IBINIT1
50     CALL IBINIT1(IBFIND,IBSTOP,IBTRG,IBCLR,IBPCT,IBSIC,IBLOC,IBPPC,IBBNA,IBON
60     CALL IBINIT2(IBGTS,IBCAC,IBWAIT,IBPOKE,IBWRTF,IBWRTA,IBWRT,IBCMDA,IBCMD,I
70 REM
80 REM  ---- --  --  -- ------------------------------
90 REM              MULTI MT9500 TEST PROGRAM
100 REM  ----------------------------------------------
110 REM
120 REM  Note:  This program is a demonstration program for the MT9500.
130 REM  The program will control 1-8 units via the GPIB interface. The
140 REM  program is designed as a programmers example for users to design
150 REM  larger, and/or application specific control programs.
160 REM         The program was a take off of the control program named
170 REM  MT9500.BAS (kit 12398-811). This program has been written
180 REM  assuming all options were installed in the MT9500(s). If options
190 REM  are not purchased, the appropriate lines of code should be
200 REM  commented out or deleted.
210 REM
211 REM  Tips:  Different modes may require different timeout values
212 REM         if any, in particular, modes with page orientation
213 REM         such as formfeed or modes with various amounts of
214 REM         output such as playback.
215 REM         Responses such as 01H (completion of mode) will not
216 REM         sent until mode completed. Of course, timeouts should
217 REM         eventuallly never occur unless of fatal system problem.
218 REM         Care should be taken with MT9500 talk/listen addressing.
220 REM  ----- ---------------------------------------
230 REM
240 REM      Date:            03-88     IBM-PC/AT
250 REM      Version:         1.0         Original
260 REM      Modifications:
270 REM
280 REM  ----------------------------------------------
290 REM
300 REM   Perform some initialization of variables.
310 REM
320 DIM DEVLISTEN%(8), DEVTALK%(8), LKEY$(8), HOL%(8)
330 REM
340 REM   Define addresses to talk. This could be changed to
350 REM   an interactive layout so operator could choose addresses.
360 REM
370 DEVTALK%(1) = &H41:DEVTALK%(2) = &H42
380 DEVTALK%(3) = &H43:DEVTALK%(4) = &H44
390 DEVTALK%(5) = &H45:DEVTALK%(6) = &H46
400 DEVTALK%(7) = &H47:DEVTALK%(8) = &H48
410 REM
420 REM   Define listen addresses. Similar to above
430 REM
440 DEVLISTEN%(1) = &H21:DEVLISTEN%(2) = &H22
450 DEVLISTEN%(3) = &H23:DEVLISTEN%(4) = &H24
460 DEVLISTEN%(5) = &H25:DEVLISTEN%(6) = &H26
470 DEVLISTEN%(7) = &H27:DEVLISTEN%(8) = &H28
480 REM
490 REM ------------- Initialize ----------------
500 REM
510     DIM ARRAY(3)
520     DIM CHN$(8),MTFILE$(8)
530     DIM BUFF$(8)
540     DIM HIGH(8),LOW(8),AVG(8)
550 REM
560 REM GPIB0% is name given to interface adaptor board
570 REM subroutines which begin with IB are defined by GPIB handler
580 REM
590     UNL% = &H3F      ' GPIB unlisten command
600     UNT% = &H5F      ' GPIB untalk command
610     LLO% = &H11      ' GPIB local lock out
620     DCL% = &H14      ' GPIB device clear
630 REM
640     MTBUF$=SPACE$(40)
650     CMD$ = SPACE$(10)        ' command buffer
660     WRT$ = SPACE$(255)       ' write buffer
670 REM
680     ATLISTEN% = &H20  'IBM-AT TO LISTEN
690     ATTALK%   = &H40  'IBM-AT TO TALK
700 REM
710  RATE$="mm/sec":SP%=25:RG$="1":MODE%=0
720  RFLAG%=0:POINTER%=50:RETRY%=0
730 REM
740  FOR I=1 TO 8:CHN$(I)=STR$(I):CHN$(I)=RIGHT$(CHN$(I),1):NEXT
750 REM
760  BUFF$(1)="CHANNEL   #1                                                    "
770  BUFF$(2)="CHANNEL   #2                                                    "
780  BUFF$(3)="CHANNEL   #3                                                    "
790  BUFF$(4)="CHANNEL   #4                                                    "
800  BUFF$(5)="CHANNEL   #5                                                    "
810  BUFF$(6)="CHANNEL   #6                                                    "
820  BUFF$(7)="CHANNEL   #7                                                    "
830  BUFF$(8)="CHANNEL   #8                                                    "
840 REM
850 REM
860 REM
870 REM ---------------- Initial menu (select interface) ---------
880 REM
890 KEY OFF:COLOR 0,1:CLS:COLOR 15,1
900 LOCATE 5,19:PRINT"MULTI MT9500 RECORDER CONTROL"
910 LOCATE 6,19:PRINT"----------------------------"
920 LOCATE 13,21:PRINT"1:   Begin GPIB control"
930 LOCATE 15,21:PRINT"2:   EXIT Program"
940 B$=INKEY$:IF B$=""THEN 940
950 IF B$="1" THEN 6560
960 IF B$="2" THEN 6890
970 GOTO 890
980 REM
990 REM  ---------- MAIN MENU ----------------
1000 REM
1010 CLS
1020 LOCATE 3,19:PRINT"MULTI MT-9500 CONTROL PROGRAM"
1030 LOCATE 4,19:PRINT"-----------------------------"
1040 LOCATE 7,22:PRINT"1.   SET TIME and DATE"
1050 LOCATE 8,22:PRINT"2.   FORMFEED"
1060 LOCATE 9,22:PRINT"3.   LINE PRINTER"
1070 LOCATE 10,22:PRINT"4.   REAL TIME OSCILLOGRAPH"
1080 LOCATE 11,22:PRINT"5.   TRANSIENT CAPTURE"
1090 LOCATE 12,22:PRINT"6.   AUTO TEST"
1100 LOCATE 13,22:PRINT"7.   DISPLAY OR CHANGE ANNOTATION"
1110 LOCATE 14,22:PRINT"8.   Exit to BASIC."
1120 PRINT:PRINT "                          Choose a number (or X to exit)";
1130 NU$=INKEY$
1140 REM                    1   2    3     4    5     6     7
1150 ON VAL(NU$) GOTO  1200,2710,2050,2800,3490,4870,5830,6880
1160 IF NU$="X" THEN GOTO 6890
1170 GOTO 1130
1180 REM  ------------------------------------
1190 REM
1200 REM        SET TIME AND DATE ON UNITS.
1210 REM  --- Read time from all units but use (show) the last one to
1220 REM      operator to change. Send this time to all units.
1230 REM
1240 REM  ------------------------------------
```

```
1250 IF NOMT%=1 THEN GOTO 1010                    'skip if no MT
1260 WRT$=CHR$(&H1B)+"E"                          'set time (ESC E)
1270 V%=7
1280 CALL IBTMO (GPIB0%,V%)                       'change GPIB timeout
1290 GOSUB 7530                                    'send MT cmd
1300 V%=15
1310 CALL IBTMO (GPIB0%,V%)                       'reset GPIB timeout
1320 CLS:GOSUB 6970                               'put time in T$
1330 CLS
1340 T$=MID$(T$,5,8)
1350 TIME$=T$
1360 LOCATE 11,26:PRINT"The current TIME is...."+T$
1370 LOCATE 13,16:PRINT"Enter new TIME or <Carriage Return> if no change ";
1380 LOCATE 15,35:PRINT"HH:MM<CR>";:LOCATE 16,33:INPUT T$
1390 WRT$=T$+CHR$(&HD):GOSUB 7530                 'send time to MT
1400 FOR I= 1 TO AMT%
1410 ANS$(I)=SPACE$(1)
1420 NEXT I
1430 FOR I=1 TO AMT%
1440 ADDR%=I
1450 GOSUB 7350
1460 IF ANS$(I)=CHR$(&H11) THEN 1470 ELSE 1490
1470 NEXT I
1480 GOTO 1520
1490 REM BAD TIME
1500 LOCATE 18,26:PRINT"*** BAD TIME, try again. ***";:FOR I = 1 TO 1500
1510 LOCATE 18,26:PRINT"                                    ";:GOTO 1370
1520 REM IF T$="" THEN 3920 ELSE TIME$=T$
1530 GOSUB 7710     'LOOK FOR AN 1H
1540 REM
1550 REM ----------------------------------------
1560 REM          Read date from all devices.
1570 REM
1580 REM    After operator accepts/changes date, set all
1590 REM    devices to the same date.
1600 REM ----------------------------------------
1610 WRT$=CHR$(&H1B)+"D":GOSUB 7530       'set date cmd (ESC D)
1620 CLS:GOSUB 7180                       'get date from all.
1630 A$=D$:CLS                             'allign and prepare
1640 DAY$=LEFT$(A$,2)                      'for display to operator
1650 A$=RIGHT$(A$,6)
1660 MONTH$=LEFT$(A$,3)
1670 YEAR$=RIGHT$(A$,2)
1680 IF MONTH$="JAN" THEN MONTH$="01"
1690 IF MONTH$="FEB" THEN MONTH$="02"
1700 IF MONTH$="MAR" THEN MONTH$="03"
1710 IF MONTH$="APR" THEN MONTH$="04"
1720 IF MONTH$="MAY" THEN MONTH$="05"
1730 IF MONTH$="JUN" THEN MONTH$="06"
1740 IF MONTH$="JUL" THEN MONTH$="07"
1750 IF MONTH$="AUG" THEN MONTH$="08"
1760 IF MONTH$="SEP" THEN MONTH$="09"
1770 IF MONTH$="OCT" THEN MONTH$="10"
1780 IF MONTH$="NOV" THEN MONTH$="11"
1790 IF MONTH$="DEC" THEN MONTH$="12"
1800 A$ = MONTH$+"-"+DAY$+"-"+YEAR$
1810 REM DATE$=A$
1820 LOCATE 11,24:PRINT"The current DATE is...."+D$
1830 LOCATE 13,16:PRINT"Enter new DATE or <Carriage Return> if no change ";
1840 LOCATE 15,35:PRINT"MM/DD/YY<CR>":LOCATE 16,33:INPUT D$
1850 WRT$=D$+CHR$(&HD):GOSUB 7530
1860 FOR I=1 TO AMT%
1870 ANS$(I)=SPACE$(1)
1880 NEXT I
1890 FOR I=1 TO AMT%
1900 ADDR%=I
1910 GOSUB 7350
1920 IF ANS$(I)=CHR$(&H5) THEN 1980 ELSE 1930
1930 NEXT I
1940 REM
1950 REM
1960 GOSUB 7710     'look for a 01h.
1970 GOTO 1010
1980 LOCATE 18,26:PRINT"*** BAD DATE, try again. ***";:FOR I = 1 TO 1500:NEXT
1990 LOCATE 18,26:PRINT"                                    ";:GOTO 1830
2000 REM
2010 REM
2020 LOCATE 25,1:PRINT"**** ERROR NUMBER ";ERR," IN LINE ";ERL:END
2030 REM ------  ------------------------------
2040 REM
2050 REM             Line printer
2060 REM
2070 REM   Note: This will send the file to all devices!!
2080 REM ------------------- ------------ --
2090 CLS:LOCATE 4,25
2100 PRINT"MT-9500 PRINT TEST - choose a mode"
2110 LOCATE 5,25:PRINT" "
2120 LOCATE 8,20:PRINT"1. Normal (standard) character format."
2130 LOCATE 10,20:PRINT"2. Compressed screeen print format."
2140 A$=INKEY$:IF A$=""THEN 2140
2150 IF (A$="1") OR (A$="2") THEN 2170
2160 GOTO 2140
2170 CLS:LOCATE 4,21
2180 PRINT"1. LINE PRINT FORMAT"
2190 LOCATE 6,21:PRINT"2. PAGE PRINT FORMAT"
2200 B$=INKEY$:IF B$="" THEN 2200
2210 IF B$="1" OR B$="2" THEN 2230
2220 GOTO 2170
2230 IF A$="1" THEN 2260
2240 WRT$=CHR$(&H1B)+"S"+B$         'ESC S x  for compressed
2250 GOTO 2270
2260 WRT$=CHR$(&H1B)+"P"+B$         'ESC P x for standard
2270 CLS
2280 LOCATE 10,26:PRINT"Enter Command or File name"
2290 LOCATE 12,34:PRINT STRING$(12," ")
2300 LOCATE 14,21:PRINT" EX to Exit"
2310 LOCATE 16,21:PRINT" DIRA - directory of Drive A"
2320 LOCATE 17,21:PRINT" DIRB - directory of Drive B"
2330 LOCATE 18,21:PRINT" DIRC - directory of Drive C"
2340 LOCATE 12,32:INPUT FILE$
2350 IF FILE$="" THEN 2270
2360 IF FILE$="EX" OR FILE$="ex" THEN 1010
2370 IF FILE$="DIRA" OR FILE$="dira" THEN 2410
2380 IF FILE$="DIRB" OR FILE$="dirb" THEN 2430
2390 IF FILE$="DIRC" OR FILE$="dirc" THEN 2450
2400 GOTO 2480
2410 CLS:LOCATE 1,1:FILES "A:"          'directory of A
2420 GOTO 2460
2430 CLS:LOCATE 1,1:FILES "B:"          'directory of B
2440 GOTO 2460
2450 CLS:LOCATE 1,1:FILES "C:"          'directory of C
2460 LOCATE 25,18:PRINT"Press any Key to exit";
2470 L$=INKEY$:IF L$="" THEN 2470 ELSE GOTO 2270
2480 IF NOMT%=1 THEN GOTO 1010
2490 GOSUB 7530                    'send cmd string to enter mode
2500 CLS:LOCATE 18,27:PRINT"Press 'X' to End Printout"
2510 LOCATE 9,27:PRINT "Printout in progress"
2520 OPEN FILE$ FOR INPUT AS #2
2530 IF EOF(2) THEN 2630
2540 LINE INPUT #2,A$
2550 IF IEEEFLAG%=1 THEN 2580
2560 PRINT #1,A$+CHR$(&HD)+CHR$(&HA);:M$=INKEY$
```

```
2570 GOTO 2620
2580 WRT$=A$+CHR$(&HD)+CHR$(&HA)
2590 REM CALL IBWRT (GPIB0%,WRT$)
2600 GOSUB 7530
2610 M$=INKEY$
2620 IF M$="" THEN 2530 ELSE IF M$="X" OR M$="x" THEN 2630 GOTO 2530
2630 M$="":CLOSE #2:PRINT"ABORTED":WRT$=CHR$(&HB):GOSUB 7530
2640 GOSUB 7710 'WAIT  FOR 1
2650 GOTO 1010
2660 REM
2670 REM  ------------------------------------
2680 REM
2690 REM              FORMFEED
2700 REM
2710 REM  Send a formfeed command to all MT9500(s)
2720 REM
2730 REM  ------------------------------------
2740 REM
2750 IF NOMT%=1 THEN GOTO 1010
2760 WRT$=CHR$(&H1B)+"F":GOSUB 7530
2770 GOSUB 7700  'wait for an 01H
2780 GOTO 1010   'go back to MAIN MENU
2790 REM
2800 REM  -- ----------------------------------
2810 REM
2820 REM         ANALOG REAL TIME RECORDER
2830 REM
2840 REM  -   - - ------------------------------
2850 REM
2860 IF NOMT%=1 THEN GOTO 3020
2870 SPEED%=25:SPR$="1"    'set default speed
2880 WRT$=CHR$(&H1B)+"Z":GOSUB 7520:GOSUB 7820            'enter set up
2890 WRT$=CHR$(&H9)+"-"+CHR$(&HD):GOSUB 7520:GOSUB 7820   'trig off
2900 WRT$=CHR$(&H18):GOSUB 7520:GOSUB 7710                'exit set up
2910 WRT$=CHR$(&H1B)+"R"+"8":GOSUB 7520:GOSUB 7820        'enter non-overlap
2920 CLS:LOCATE 10,10:PRINT"LOADING BUFFERS ... PLEASE WAIT"
2930 GOSUB 8250                          'LOAD TEXT BUFFERS
2940 WRT$=CHR$(&H15):GOSUB 7520
2950 HALT%=0:OVLP%=0
2960 WRT$=CHR$(&HE):GOSUB 7520       'send set speed cmd
2970 SD!=62500!/SPEED%               'convert speed to MT timer format
2980 SP$=HEX$(SD!):A$=SPACE$(4):RSET A$=SP$:WRT$=A$
2990 GOSUB 7520:GOSUB 7820       'format and send speed (4 bytes)
3000 WRT$=SPR$:GOSUB 7520:GOSUB 7820  'send range
3010 WRT$=CHR$(&H13):GOSUB 7520                          'start recorder
3020 CLS:LOCATE 3,13:PRINT"REAL TIME OSCILLOGRAPH"   'show REALTIME options
3030 LOCATE 10,19:PRINT"1. run 40 mm ch mode"
3040 LOCATE 11,19:PRINT"2. run 160 mm ch mode"
3050 LOCATE 13,19:PRINT"3. stop recorder"
3060 LOCATE 14,19:PRINT"4. change speed"
3070 LOCATE 18,19:PRINT"5. return to main menu"
3080 LOCATE 23,19:PRINT"enter a number: "
3090 M$=INKEY$:IF M$="" THEN 3090
3100 IF NOMT%=1 THEN GOTO 1010
3110 IF M$="5" THEN GOTO 3290
3120 IF M$="4" THEN GOTO 3310
3130 IF M$="3" THEN GOTO 3170
3140 IF M$="2" THEN GOTO 3230
3150 IF M$="1" THEN GOTO 3210
3160 GOTO 3090
3170 REM
3180 IF HALT%=1 THEN GOTO 3020 ELSE HALT%=1
3190 WRT$=CHR$(&H13):GOSUB 7520:GOTO 3020     'send halt
3200 REM
3210 WRT$=CHR$(&H18):GOSUB 7520:GOSUB 7710  'exit mode
3220 GOTO 2910                              'enter non-overlap mode
3230 WRT$=CHR$(&H18):GOSUB 7520:GOSUB 7710          'exit mode
3240 WRT$=CHR$(&H1B)+"R"+"2":GOSUB 7520:GOSUB 7820  'enter overlap mode
3250 CLS:LOCATE 10,10:PRINT"LOADING BUFFERS ... PLEASE WAIT"
3260 GOSUB 8250                          'LOAD TEXT BUFFERS
3270 WRT$=CHR$(&H15):GOSUB 7520
3280 HALT%=0:OVLP%=1:GOTO 2960
3290 WRT$=CHR$(&H18):GOSUB 7520:GOSUB 7710:GOTO 1010  'exit - goto Main Menu
3300 REM
3310 CLS:PRINT"enter number to choose range"
3320 PRINT:PRINT"  1. mm/sec"
3330 PRINT"  2. mm/min"
3340 PRINT"  3. mm/hr"
3350 SPR$=INKEY$
3360 IF SPR$="1" THEN CLS:PRINT"range is mm/sec":GOTO 3400
3370 IF SPR$="2" THEN CLS:PRINT"range is mm/min":GOTO 3400
3380 IF SPR$="3" THEN CLS:PRINT"range is mm/hr": GOTO 3400
3390 GOTO 3350      'bad entry
3400 PRINT:INPUT"enter speed  ",SPEED%
3410 IF SPEED% > 100 OR SPEED% < 1 THEN GOTO 3400
3420 WRT$=CHR$(&HE):GOSUB 7520       'send set speed cmd
3430 SD!=62500!/SPEED%                'convert speed to MT timer format
3440 SP$=HEX$(SD!):A$=SPACE$(4):RSET A$=SP$:WRT$=A$
3450 GOSUB 7520:GOSUB 7820       'format and send speed (4 bytes)
3460 WRT$=SPR$:GOSUB 7520:GOSUB 7820  'send range
3470 GOTO 3020
3480 REM  ------------------------------- -
3490 REM
3500 REM        TRANSIENT CAPTURE
3510 REM
3520 REM  ---------------------------------
3530 CLS:LOCATE 3,22:PRINT"TRANSIENT CAPTURE"
3540 LOCATE 4,22:PRINT"-----------------"
3550 RES$="10":WND$="03":TPOS$="1":TCH$="1"
3560 IF NOMT%=1 GOTO 3570 ELSE GOSUB 8450  'set recorder to default
3570 LOCATE 10,19:PRINT"1. acquire snapshot"
3580 LOCATE 11,19:PRINT"2. playback from MT memory"
3590 LOCATE 15,19:PRINT"3. return to main menu"
3600 LOCATE 23,19:PRINT"enter a number: "
3610 M$=INKEY$:IF M$="" THEN 3610
3620 IF M$="1" GOTO 3670
3630 IF M$="2" GOTO 4590
3640 IF M$="3" THEN GOTO 1010
3650 GOTO 3610
3660 REM
3670 CLS:LOCATE 3,13:PRINT"ACQUIRE SNAPSHOT"
3680 LOCATE 10,19:PRINT"1. start immediate snapshot"
3690 LOCATE 11,19:PRINT"2. start triggered snapshot"
3700 LOCATE 13,19:PRINT"3. show/change number of samples"
3710 LOCATE 14,19:PRINT"4. show/change resolution"
3720 LOCATE 15,19:PRINT"5. show/change trigger settings"
3730 LOCATE 20,19:PRINT"6. exit snapshot menu"
3740 NU$=INKEY$:IF NU$="" THEN 3740
3750 IF NU$="1" THEN GOTO 3820
3760 IF NU$="2" THEN GOTO 3860
3770 IF NU$="3" THEN GOTO 3960
3780 IF NU$="4" THEN GOTO 4150
3790 IF NU$="5" THEN GOTO 4340
3800 IF NU$="6" THEN GOTO 3530
3810 GOTO 3740
3820 IF NOMT%=1 THEN GOTO 3670
3830 CLS:LOCATE 3,13:PRINT"snapshot in progress"
3840 WRT$=CHR$(&H1B)+"M":GOSUB 7520:GOSUB 7710   'take snapshot
3850 GOTO 3530
3860 IF NOMT%=1 THEN GOTO 3670
3870 CLS:LOCATE 3,13:PRINT"triggered snapshot in progress"
3880 WRT$=CHR$(&H1B)+"Z":GOSUB 7520:GOSUB 7820            'enter set up
```

```
3890 WRT$=CHR$(&H9)+"+"+CHR$(&HD):GOSUB 7520:GOSUB 7820   'trig on
3900 WRT$=CHR$(&H18):GOSUB 7520:GOSUB 7710                'exit set up
3910 WRT$=CHR$(&H1B)+"M":GOSUB 7520:GOSUB 7710            'take snapshot
3920 WRT$=CHR$(&H1B)+"Z":GOSUB 7520:GOSUB 7820
3930 WRT$=CHR$(&H9)+"-"+CHR$(&HD):GOSUB 7520:GOSUB 7820   'trig off
3940 WRT$=CHR$(&H18):GOSUB 7520:GOSUB 7710
3950 GOTO 3530
3960 CLS:PRINT:PRINT"present window size is "+WND$+" Ksamp"
3970 PRINT:PRINT"choose  1.  1 Ksamp"
3980 PRINT"         2.  3 Ksamp"
3990 PRINT"         3.  5 Ksamp"
4000 PRINT"         4. 10 Ksamp"
4010 PRINT"         5. 16 Ksamp"
4020 PRINT" any other key for no change"
4030 M$=INKEY$: IF M$="" THEN GOTO 4030
4040 IF M$="1" THEN WND$="01":GOTO 4100
4050 IF M$="2" THEN WND$="03":GOTO 4100
4060 IF M$="3" THEN WND$="05":GOTO 4100
4070 IF M$="4" THEN WND$="10":GOTO 4100
4080 IF M$="5" THEN WND$="16":GOTO 4100
4090 GOTO 3670
4100 IF NOMT%=1 THEN GOTO 3960
4110 WRT$=CHR$(&H1B)+"Z":GOSUB 7520:GOSUB 7820
4120 WRT$=CHR$(4)+"8"+WND$+CHR$(&HD):GOSUB 7520:GOSUB 7820   'change it
4130 WRT$=CHR$(&H18):GOSUB 7520:GOSUB 7710
4140 GOTO 3960
4150 CLS:PRINT:PRINT"present resolution is "+RES$+" msec/mm"
4160 PRINT:PRINT"choose  1.  1 msec/mm"
4170 PRINT"         2.  2 msec/mm"
4180 PRINT"         3.  5 msec/mm"
4190 PRINT"         4. 10 msec/mm"
4200 PRINT"         5. 20 msec/mm"
4210 PRINT" any other key for no change"
4220 M$=INKEY$: IF M$="" THEN GOTO 4220
4230 IF M$="1" THEN RES$="01":GOTO 4290
4240 IF M$="2" THEN RES$="02":GOTO 4290
4250 IF M$="3" THEN RES$="05":GOTO 4290
4260 IF M$="4" THEN RES$="10":GOTO 4290
4270 IF M$="5" THEN RES$="20":GOTO 4290
4280 GOTO 3670
4290 IF NOMT%=1 THEN GOTO 4150
4300 WRT$=CHR$(&H1B)+"Z":GOSUB 7520:GOSUB 7820
4310 WRT$=CHR$(3)+RES$+CHR$(&HD):GOSUB 7520:GOSUB 7820   'change it
4320 WRT$=CHR$(&H18):GOSUB 7520:GOSUB 7710
4330 GOTO 4150
4340 CLS:PRINT:PRINT"present trigger channel is "+TCH$
4350 PRINT:PRINT"enter new trigger channel"
4360 PRINT"or any other key to continue"
4370 M$=INKEY$: IF M$="" THEN GOTO 4370
4380 IF M$>"0" AND M$<"9" THEN TCH$=M$
4390 IF TPOS$="1" THEN WRT$="start"
4400 IF TPOS$="2" THEN WRT$="center"
4410 IF TPOS$="3" THEN WRT$="end"
4420 PRINT:PRINT"present trigger is at "+WRT$+" of trace"
4430 PRINT:PRINT"other trigger settings determined by front panel controls"
4440 PRINT:PRINT"enter 1 for start"
4450 PRINT"      2 for center"
4460 PRINT"      3 for end"
4470 PRINT" any other key for no change"
4480 M$=INKEY$:IF M$="" THEN GOTO 4480
4490 IF M$>"0" AND M$<"4" THEN TPOS$=M$: GOTO 4510
4500 GOTO 3670
4510 IF NOMT%=1 THEN GOTO 4340
4520 WRT$=CHR$(&H1B)+"Z":GOSUB 7520:GOSUB 7820
4530 WRT$=CHR$(5)+TPOS$+CHR$(&HD):GOSUB 7520:GOSUB 7820
4540 WRT$=CHR$(&HB)+TCH$+CHR$(&HD):GOSUB 7520:GOSUB 7820   'change it
```



```
4550 WRT$=CHR$(&H18):GOSUB 7520:GOSUB 7710
4560 GOTO 4340
4570 REM
4580 REM
4590 CLS:LOCATE 3,13:PRINT"PLAYBACK MT MEMORY"
4600 RETRY%=1
4610 LOCATE 10,19:PRINT"1. 40 mm channels"
4620 LOCATE 11,19:PRINT"2. 160 mm channels (overlap)"
4630 LOCATE 12,19:PRINT"3. X-Y PLOT of channels 1 and 2"
4640 LOCATE 13,19:PRINT"4. numeric listing"
4650 LOCATE 18,19:PRINT"5. change start point of playback"
4660 LOCATE 20,19:PRINT"6. exit playback menu"
4670 NU$=INKEY$:IF NU$="" THEN 4670
4680 IF NU$="1" THEN GOTO 4760
4690 IF NU$="2" THEN GOTO 4760
4700 IF NU$="3" THEN GOTO 4760
4710 IF NU$="4" THEN GOTO 4760
4720 IF NU$="5" THEN GOTO 4670
4730 IF NU$="6" THEN RETRY%=0:GOTO 3530
4740 GOTO 4670                'bad entry
4750 REM
4760 IF NOMT%=1 THEN GOTO 4590
4770 V%=0:CALL IBTMO (GPIB0%,V%)  'extend or eliminate timeout since
4780                              '01H code form MT9500 will not come
4790                              'till playback completed.
4800 WRT$=CHR$(&H1B)+"N"+NU$:GOSUB 7530      'send playback cmd
4810 GOSUB 7820
4820 CLS:LOCATE 3,13:PRINT"PLAYBACK IN PROGRESS"
4830 WRT$=CHR$(&H13):GOSUB 7530:GOSUB 7710
4840 GOTO 4590                               'go back to MAIN MENU
4850 REM
4860 REM
4870 REM ---- Autotest --------
4880 REM
4890 CLS:LOCATE 3,10:PRINT"AUTOMATIC TEST"
4900 LOCATE 5,10:PRINT"MT9500 must have all options installed for this test"
4910 LOCATE 7,10:PRINT"If RS-232 is used the digital test is not done"
4920 LOCATE 10,10:PRINT"enter: 1 for long test (xx min)"
4930 LOCATE 11,10:PRINT"       2 for short test "
4940 LOCATE 14,10:PRINT"       any other key will exit"
4950 M$=INKEY$:IF M$="" THEN GOTO 4950
4960 IF NOMT%=1 THEN GOTO 1010
4970 IF M$="1" THEN GOTO 5000
4980 IF M$="2" THEN GOTO 5770
4990 GOTO 1010     'back to MAIN MENU
5000 CLS:LOCATE 3,10:PRINT"AUTOMATIC TEST IN PROGRESS"
5010 MD$="8"       'start with non-overlap
5020 LOCATE 5,10:PRINT"press space bar to exit"
5030 MTBUF$="REALTIME TEST OF MT9500   25 mm/sec"
5040 GOSUB 7960
5050 WRT$=CHR$(&H1B)+"Z":GOSUB 7520:GOSUB 7820            'enter set up
5060 WRT$=CHR$(&H9)+"-"+CHR$(&HD):GOSUB 7520:GOSUB 7820   'trig off
5070 WRT$=CHR$(&H18):GOSUB 7520:GOSUB 7710                'exit set up
5080 WRT$=CHR$(&H1B)+"R"+MD$:GOSUB 7520:GOSUB 7820        'enter mode
5090 GOSUB 8250                                           'load text buffers
5100 WRT$=CHR$(&H15):GOSUB 7520                           'print annotation
5110 WRT$=CHR$(&H13):GOSUB 7520                           'start recorder
5120 V=20:GOSUB 8100                         'wait 20 seconds
5130 WRT$=CHR$(&H18):GOSUB 7520:GOSUB 7710  'exit mode
5140 MTBUF$="SPEED TEST   1, 5, 25, 50, 100 mm/sec"
5150 GOSUB 7960
5160 M$=INKEY$:IF M$=" " THEN GOTO 1010
5170 WRT$=CHR$(&H1B)+"R"+MD$:GOSUB 7520:GOSUB 7820        'enter mode
5180 SPEED%=1:SPR$="1":GOSUB 8160   'set speed
5190 WRT$=CHR$(&H13):GOSUB 7520
5200 V=20:GOSUB 8100
```

```
5210 SPEED%=5:GOSUB 8160
5220 V=20:GOSUB 8100
5230 SPEED%=25:GOSUB 8160
5240 V=5:GOSUB 8100
5250 SPEED%=50:GOSUB 8160
5260 V=5:GOSUB 8100
5270 SPEED%=100:GOSUB 8160
5280 V=5:GOSUB 8100
5290 WRT$=CHR$(&H18):GOSUB 7520:GOSUB 7710  'exit mode
5300 MTBUF$="Motor test  100 mm/sec on/off"
5310 GOSUB 7960
5320 M$=INKEY$:IF M$=" " THEN GOTO 1010
5330 WRT$=CHR$(&H1B)+"R"+MD$:GOSUB 7520:GOSUB 7820        'enter mode
5340 SPEED%=100:SPR$="1":GOSUB 8160   'set speed
5350 FOR I=1 TO 20                    'turn on and off
5360  WRT$=CHR$(&H13):GOSUB 7520
5370  V=1:GOSUB 8100
5380 NEXT
5390 WRT$=CHR$(&H18):GOSUB 7520:GOSUB 7710  'exit mode
5400 MTBUF$="toggle sys ch, sys event, and ID"
5410 GOSUB 7960
5420 M$=INKEY$:IF M$=" " THEN GOTO 1010
5430 WRT$=CHR$(&H1B)+"R"+MD$:GOSUB 7520:GOSUB 7820        'enter mode
5440 GOSUB 8250
5450 WRT$=CHR$(&H15):GOSUB 7520                           'print annotation
5460 WRT$=CHR$(&H13):GOSUB 7520
5470 V=5:GOSUB 8100
5480 WRT$=CHR$(&H13)+CHR$(&O3)+"-":GOSUB 7520    'stop and shut off sys chan
5490 WRT$=CHR$(&H13):GOSUB 7520
5500 V=5:GOSUB 8100
5510 WRT$=CHR$(&O3)+"+":GOSUB 7520
5520 WRT$=CHR$(&O5)+"-":GOSUB 7520                'shut off sys event
5530 V=5:GOSUB 8100
5540 WRT$=CHR$(&O5)+"+":GOSUB 7520                'turn on sys event
5550 FOR I=1 TO 20
5560  V=.1:GOSUB 8100
5570  WRT$=CHR$(&HC):GOSUB 7520                   'toggle event state
5580 NEXT
5590 V=1:GOSUB 8100
5600 WRT$=CHR$(&H18):GOSUB 7520:GOSUB 7710
5610 GOSUB 8450                                   'set snapshot defaults
5620 MTBUF$=" snapshot: 10 ms/mm, 3K"
5630 GOSUB 7960                                   'print header
5640 WRT$=CHR$(&H1B)+"M":GOSUB 7520:GOSUB 7710    'take a snapshot
5650 IF MD$="2" THEN GOTO 5680
5660 WRT$=CHR$(&H1B)+"N1":GOSUB 7520:GOSUB 7820  'playback non-overlap
5670 GOTO 5690
5680 WRT$=CHR$(&H1B)+"N2":GOSUB 7520: GOSUB 7820 'playback overlap
5690 WRT$=CHR$(&H13):GOSUB 7520:GOSUB 7710
5700 IF MD$="8" THEN MD$="2":GOTO 5030            'retest with overlap
5710 V%=14:CALL IBTMO (GPIB0%,V%)
5720 WRT$=CHR$(&H1B)+"N3":GOSUB 7520: GOSUB 7820 'playback x-y
5730 WRT$=CHR$(&H13):GOSUB 7520:GOSUB 7710
5740 V%=12:CALL IBTMO (GPIB0%,V%)
5750 MTBUF$="Data Logger "
5760 GOSUB 7960
5770 WRT$=CHR$(&H1B)+"T":GOSUB 7520: GOSUB 7820  'data logger
5780 WRT$=CHR$(&H13):GOSUB 7520
5790 V=20: GOSUB 8100
5800 WRT$=CHR$(&H18):GOSUB 7520: GOSUB 7710      'exit mode
5810 GOTO 1010                                    'back to main menu
5820 REM
5830 REM ---------- Edit annotation buffers ------------
5840 REM
5850 CLS
5860 PRINT:PRINT"There is a 60 char text buffer for each channel.  Buffers"
5870 PRINT"are reset to CHANNEL # at the start of the program."
5880 PRINT:PRINT"Except for AUTOTEST, these buffers are displayed during all"
5890 PRINT"recorder modes."
5900 LOCATE 7,3:PRINT BUFF$(1)
5910 LOCATE 9,3:PRINT BUFF$(2)
5920 LOCATE 11,3:PRINT BUFF$(3)
5930 LOCATE 13,3:PRINT BUFF$(4)
5940 LOCATE 15,3:PRINT BUFF$(5)
5950 LOCATE 17,3:PRINT BUFF$(6)
5960 LOCATE 19,3:PRINT BUFF$(7)
5970 LOCATE 21,3:PRINT BUFF$(8)
5980 PRINT:PRINT"enter 1 - 8 to edit   or   9 to exit"
5990 M$=INKEY$: IF M$="" THEN GOTO 5990
6000 IF M$="9" THEN GOTO 1010
6010 IF M$="1" THEN I=1:GOTO 6100
6020 IF M$="2" THEN I=2:GOTO 6100
6030 IF M$="3" THEN I=3:GOTO 6100
6040 IF M$="4" THEN I=4:GOTO 6100
6050 IF M$="5" THEN I=5:GOTO 6100
6060 IF M$="6" THEN I=6:GOTO 6100
6070 IF M$="7" THEN I=7:GOTO 6100
6080 IF M$="8" THEN I=8:GOTO 6100
6090 GOTO 5990
6100 LOCATE (I*2+5),1:PRINT"*"
6110 LOCATE 23,1:PRINT"ENTER ANY VALID CHARACTER OR <CR> TO END EDIT"
6120 J=1                                  'CURSOR
6130 LOCATE (I*2+5),70:PRINT J
6140 M$=INKEY$:IF M$="" THEN GOTO 6140
6150 IF LEN(M$)=2 THEN M$=RIGHT$(M$,1):GOTO 6190
6160 IF M$=CHR$(&HD) THEN GOTO 6260
6170 IF M$>CHR$(31) AND M$<CHR$(123) THEN GOTO 6220
6180 GOTO 6140              'IGNORE BAD CHARACTER
6190 IF M$=CHR$(77) AND J<60 THEN J=J+1:GOTO 6130
6200 IF M$=CHR$(75) AND J>1 THEN J=J-1:GOTO 6130
6210 GOTO 6140
6220 MID$(BUFF$(I),J)=M$
6230 LOCATE (I*2+5),3:PRINT BUFF$(I)
6240 IF J<60 THEN J=J+1
6250 GOTO 6130
6260 REM   end edit
6270 GOTO 5850
6280 REM
6290 REM ------- subroutine to initialize GPIB ------
6300 REM
6310 DEV$="GPIB0"
6320 CALL IBFIND (DEV$,GPIB0%)
6330 IF GPIB0% < 0 THEN 6470
6340 CALL IBSIC (GPIB0%)
6350 IF IBSTA% < 0 THEN 6490
6360 CMD$=CHR$(DCL%)
6370 CALL IBCMD (GPIB0%,CMD$)
6380 IF IBSTA% < 0 THEN 6490
6390 V%=&H40D
6400 CALL IBEOS (GPIB0%,V%)
6410 IF IBSTA% < 0 THEN 6490
6420 RETURN
6430 REM
6440 REM
6450 REM ------  here on interface init error --------
6460 REM
6470 CLS:COLOR 30,4:LOCATE 25,1:PRINT"**** ERROR IN IBFIND CALL ****";
6480 GOTO 6520
6490 CLS:LOCATE 25,1:PRINT"**** ERROR IN GPIB CALL ****";IBSTA%,IBERR%,IBCNT%
6500 GOTO 6520
6510 CLS:LOCATE 16,31:PRINT"MT-9500 NOT ACTIVE";
6520 STOP
```

```
6530 REM
6540 REM
6550 REM
6560 REM ------------ Here to set up GPIB ---------------
6570 REM
6580 CLS
6590 LOCATE 2,22:PRINT"IBM - MT9500 CONFIGURATION"
6600 LOCATE 3,22:PRINT"--------------------------"
6610 LOCATE 5,8:PRINT"This program may control up to 8 MT9500 Chart recorders."
6620 LOCATE 7,15:PRINT"ENTER NUMBER OF RECORDERS TO CONTROL: (1-8) "
6630 M$=INKEY$:IF M$="" THEN 6630
6640 IF (M$)="1") AND (M$<="8") THEN 6650 ELSE 6580
6650 AMT%=VAL(M$)
6660 PRINT
6670 PRINT"    Number of MT9500 chart recorders to be controlled:",M$
6680 PRINT
6690 REM    Instructions to setup the MT9500's.
6700 REM
6710 REM
6720 REM
6730 PRINT"                    MT9500 Setup Instructions"
6740 PRINT"                    -------------------------"
6750 PRINT"       1 - On MT9500 #1, Press the SET COMM function on MT by [F2][6]
6760 PRINT"       2 - Scroll to GPIB and press ENTER."
6770 PRINT"       3 - Enter GPIB address 01 and press ENTER."
6780 PRINT"       4 - MT-9500 will display GPIB."
6790 PRINT"       5 - Perform the same steps with the next GPIB address [2,3...]
6800 PRINT"           for additional units."
6810 PRINT:PRINT"   The MT-9500(s) from this point will be controlled by the HOS
6820 REM
6830 PRINT:PRINT"                                PRESS ANY KEY TO BEGIN"
6840 M$=INKEY$:IF M$="" THEN 6840
6850 IEEEFLAG%=1:NOMT%=0
6860 GOSUB 6290
6870 GOTO 1010                'goto MAIN MENU
6880 REM ----------------------------------------
6890 REM            EXIT TO BASIC
6900 REM ----------------------------------------
6910 CLOSE:COLOR 7,0:CLS:END
6920 REM
6930 REM ***************** SUBROUTINES *********************
6940 REM
6950 REM ---------- subroutine to get MT time --------------------
6960 REM
6970 IF IEEEFLAG%=0 THEN 7110
6980 T$=SPACE$(20)
6990 FOR I = 1 TO AMT%
7000 CMD$=CHR$(UNT%)+CHR$(UNL%)+CHR$(DEVTALK%(I))+CHR$(ATLISTEN%)
7010 CALL IBCMD (GPIB0%,CMD$)
7020 IF IBSTA% < 0 THEN 6490
7030 CALL IBRD (GPIB0%,T$)
7040 IF IBSTA% < 0 THEN 6490
7050 CMD$=CHR$(UNT%)+CHR$(UNL%)
7060 CALL IBCMD (GPIB0%,CMD$)
7070 IF IBSTA%<0 THEN 6490
7080 NEXT I
7090 RETURN
7100 REM --- routine to get time via serial port.
7110 ON ERROR GOTO 2020
7120 LINE INPUT #1,T$
7130 ON ERROR GOTO 2020
7140 RETURN
7150 REM
7160 REM -------- Subroutine to get MT date from all devices ---
7170 REM -------- Note: Only last one received is saved for displaying.
7180 IF IEEEFLAG%=0 THEN 7310
7190 FOR I = 1 TO AMT%
7200 D$=SPACE$(20)
7210 CMD$=CHR$(UNT%)+CHR$(UNL%)+CHR$(DEVTALK%(I))+CHR$(ATLISTEN%)
7220 CALL IBCMD (GPIB0%,CMD$)
7230 IF IBSTA% < 0 THEN 6490
7240 CALL IBRD (GPIB0%,D$)
7250 IF IBSTA% < 0 THEN 6490
7260 CMD$=CHR$(UNT%)+CHR$(UNL%)
7270 CALL IBCMD (GPIB0%,CMD$)
7280 IF IBSTA% < 0 THEN 6490
7290 NEXT I
7300 RETURN
7310 LINE INPUT #1,D$
7320 RETURN
7330 REM ----- Subroutine to get a byte from MT9500  ----
7340 REM
7350    IF IEEEFLAG%=0 THEN 7460
7360    CMD$=CHR$(UNT%)+CHR$(UNL%)+CHR$(DEVTALK%(ADDR%))+CHR$(ATLISTEN%)
7370    CALL IBCMD (GPIB0%,CMD$)
7380    IF IBSTA% < 0 THEN 6490
7390    CALL IBRD (GPIB0%,ANS$(ADDR%))
7400    IF IBSTA% < 0 THEN 6490
7410    CMD$=CHR$(UNT%)+CHR$(UNL%)
7420    CALL IBCMD (GPIB0%,CMD$)
7430    IF IBSTA% < 0 THEN 6490
7440 RETURN
7450 REM
7460 ENDIT$=""
7470 IF LOC(1)=0 THEN 7470 ELSE 7480
7480 A$=INPUT$(1,#1)
7490 RETURN
7500 REM
7510 REM --- Subroutine to send WRT$ string to the MT9500(s).
7520 REM
7530 IF IEEEFLAG%=0 THEN 7680
7540 REM
7550  WRTSAVE$=WRT$
7560  FOR K=1 TO AMT%
7570  CMD$=CHR$(UNT%)+CHR$(UNL%)+CHR$(DEVLISTEN%(K))+CHR$(ATTALK%)
7580  CALL IBCMD (GPIB0%,CMD$)
7590  IF IBSTA% < 0 THEN 6490
7600  CALL IBWRT (GPIB0%,WRT$)
7610  IF IBSTA% < 0 THEN 6490
7620  CMD$=CHR$(UNT%)+CHR$(UNL%)
7630  CALL IBCMD (GPIB%,CMD$)
7640  WRT$=WRTSAVE$
7650  NEXT K
7660 RETURN
7670 REM
7680 PRINT #1,WRT$;
7690 RETURN
7700 REM
7710 REM ------- WAIT FOR A 1H FROM MT9500(S) --------
7720 FOR I = 1 TO AMT%
7730 ANS$(I)=SPACE$(1)
7740 NEXT I
7750 FOR G% = 1 TO AMT%
7760 ADDR% = G%
7770 GOSUB 7330
7780 IF ANS$(G%)=CHR$(&H1) THEN 7790 ELSE 7770
7790 NEXT G%
7800 RETURN
7810 REM
7820 REM --------- WAIT FOR A 11H FROM MT9500(S) FOR ERROR CHECKING --
7830 REM
7840 FOR I = 1 TO AMT%
```

```
7850 ANS$(I)=SPACE$(1)
7860 NEXT I
7870 FOR I = 1 TO AMT%
7880 ADDR% = I
7890 GOSUB 7330
7900 IF ANS$(ADDR%)=CHR$(&H11) THEN 7920 ELSE IF ANS$(ADDR%)=CHR$(&H5) THEN 7880
7910 LOCATE 25,1:COLOR 30,4:PRINT "*** ERROR: Received a ";ANS$(ADDR%)
7920 NEXT I
7930 RETURN
7940 REM
7950 REM
7960 REM ------- subroutine to print line of text after formfeed ---
7970 REM
7980 V%=13:CALL IBTMO (GPIB0%,V%)
7990 WRT$=CHR$(&H1B)+"F":GOSUB 7510:GOSUB 7710
8000 WRT$=CHR$(&H1B)+"P"+"1":GOSUB 7530      'enter line print mode
8010 IF IEEEFLAG%=1 THEN 8050
8020 PRINT #1,MTBUF$+CHR$(&HD)+CHR$(&HA);
8030 PRINT #1,CHR$(&HD)+CHR$(&HA);           'skip a line
8040 GOTO 8070
8050 WRT$=MTBUF$+CHR$(&HD)+CHR$(&HA)+CHR$(&HD)+CHR$(&HA)
8060 GOSUB 7530
8070 WRT$=CHR$(&HB):GOSUB 7530:GOSUB 7710    'leave line print mode
8080 RETURN
8090 REM
8100 REM ------- WAIT FOR V SECONDS -----------
8110 REM
8120 VV=TIMER
8130 IF (TIMER-VV) > V THEN RETURN
8140 GOTO 8130
8150 REM
8160 REM -------- change speed in realtime mode -----
8170 REM
8180 WRT$=CHR$(&HE):GOSUB 7520      'send set speed cmd
8190 SD!=62500!/SPEED%               'convert speed to MT timer format
8200 SP$=HEX$(SD!):A$=SPACE$(4):RSET A$=SP$:WRT$=A$
8210 GOSUB 7520:GOSUB 7820       'format and send speed (4 bytes)
8220 WRT$=SPR$:GOSUB 7520:GOSUB 7820  'send range
8230 RETURN
8240 REM
8250 REM ------- LOAD TEXT BUFFERS --------------
8260 REM
8270 WRT$=CHR$(&H17) + "1":GOSUB 7510:GOSUB 7820
8280 WRT$=BUFF$(1) + CHR$(&HD):GOSUB 7510:GOSUB 7820
8290 WRT$=CHR$(&H17) + "2":GOSUB 7510:GOSUB 7820
8300 WRT$=BUFF$(2) + CHR$(&HD):GOSUB 7510:GOSUB 7820
8310 WRT$=CHR$(&H17) + "3":GOSUB 7510:GOSUB 7820
8320 WRT$=BUFF$(3) + CHR$(&HD):GOSUB 7510:GOSUB 7820
8330 WRT$=CHR$(&H17) + "4":GOSUB 7510:GOSUB 7820
8340 WRT$=BUFF$(4) + CHR$(&HD):GOSUB 7510:GOSUB 7820
8350 WRT$=CHR$(&H17) + "5":GOSUB 7510:GOSUB 7820
8360 WRT$=BUFF$(5) + CHR$(&HD):GOSUB 7510:GOSUB 7820
8370 WRT$=CHR$(&H17) + "6":GOSUB 7510:GOSUB 7820
8380 WRT$=BUFF$(6) + CHR$(&HD):GOSUB 7510:GOSUB 7820
8390 WRT$=CHR$(&H17) + "7":GOSUB 7510:GOSUB 7820
8400 WRT$=BUFF$(7) + CHR$(&HD):GOSUB 7510:GOSUB 7820
8410 WRT$=CHR$(&H17) + "8":GOSUB 7510:GOSUB 7820
8420 WRT$=BUFF$(8) + CHR$(&HD):GOSUB 7510:GOSUB 7820
8430 RETURN
8440 REM
8450 REM --------- SET RECORDER PARAMETERS ---------
8460 REM
8470 WRT$=CHR$(&H1B)+"Z":GOSUB 7520:GOSUB 7820            'SET UP MODE
8480 WRT$=CHR$(3)+"10"+CHR$(&HD):GOSUB 7520:GOSUB 7820    '10 MS/MM CAPTURE
8490 WRT$=CHR$(4)+"8"+"03"+CHR$(&HD):GOSUB 7520:GOSUB 7820 '3 KSAMP WINDOW
8500 WRT$=CHR$(5)+"1"+CHR$(&HD):GOSUB 7520:GOSUB 7820      'TRIG AT START
8510 WRT$=CHR$(8)+"1"+CHR$(&HD):GOSUB 7520:GOSUB 7820      'EXP = 1
8520 WRT$=CHR$(9)+"-"+CHR$(&HD):GOSUB 7520:GOSUB 7820      'DISABLE TRIG
8530 WRT$=CHR$(&HB)+"1"+CHR$(&HD):GOSUB 7520:GOSUB 7820    'TRIG CH=1
8540 REM  other settings are left unchanged
8550 WRT$=CHR$(&H18):GOSUB 7520:GOSUB 7710                  'leave setup
8560 RETURN
8570 REM
8580 REM --------- set up disk drive  ------
8590 REM
8600 DISK$=INKEY$: IF DISK$="" THEN GOTO 8600
8610 IF DISK$="A" OR DISK$="B" OR DISK$="C" THEN GOTO 8630
8620 GOTO 8600
8630  MTFILE$(1)=DISK$+":"+"MTDATA1.DAT"
8640  MTFILE$(2)=DISK$+":"+"MTDATA2.DAT"
8650  MTFILE$(3)=DISK$+":"+"MTDATA3.DAT"
8660  MTFILE$(4)=DISK$+":"+"MTDATA4.DAT"
8670  MTFILE$(5)=DISK$+":"+"MTDATA5.DAT"
8680  MTFILE$(6)=DISK$+":"+"MTDATA6.DAT"
8690  MTFILE$(7)=DISK$+":"+"MTDATA7.DAT"
8700  MTFILE$(8)=DISK$+":"+"MTDATA8.DAT"
8710 RETURN
8720 REM
```

```
10 REM    ************************************************************
40 REM    *   filename:   GPIB-EP.BAS                                *
70 REM    ************************************************************
100 REM    *                                                          *
130 REM    *   MT9500 - IBM/PC Control link.                          *
160 REM    *                                                          *
190 REM    *   Note:   Program requires ENHANCED GPIB SETUP OF        *
220 REM    *           the MT9500.                                    *
250 REM    *           Next 6 lines of initialization are for         *
280 REM    *           GPIB setup (DECL.BAS)                          *
310 REM    ************************************************************
340     CLEAR    ,58892!
370     IBINIT1 = 58892!
400     IBINIT2 = IBINIT1 + 3
430     BLOAD "BIB.M",IBINIT1
460     CALL IBINIT1(IBFIND,IBSTOP,IBTRG,IBCLR,IBPCT,IBSIC,IBLOC,IBPPC,IBBNA,IBO
490     CALL IBINIT2(IBGTS,IBCAC,IBWAIT,IBPOKE,IBWRTF,IBWRTA,IBWRT,IBCMDA,IBCMD,
520 REM
550 REM    ************************************************************
580 REM    *      Demonstration program for MT9500 using the new      *
610 REM    *  ENHANCED GPIB IMPLEMENTATION. Use of this program       *
640 REM    *  requires software level SCN x3.0 in MT9500 units.       *
670 REM    *  Additionally, dip switches on rear of unit should       *
700 REM    *  set appropriately. See MANUAL or ADDENDUM.              *
730 REM    ************************************************************
760 REM
790 REM    Allow space for array variables.
820 REM
850     DIM LKEY$(15),HOL%(15),ARRAY(3),CHN$(8),MIFILE$(8),BUFF$(8)
880 REM
910 REM    GPIB declarations.
940 REM
970     GTL%        =    &H1     'GPIB go to local command
1000     SDC%        =    &H4     'selected device clear
1030     GRET%       =    &H8     'Group execute trigger
1060     UNL%        =    &H3F    'GPIB unlisten command
1090     UNT%        =    &H5F    'GPIB untalk command
1120     LLO%        =    &H11    'GPIB local lock out
1150     DCL%        =    &H14    'GPIB device clear
1180     SPE%        =    &H18    'serial poll enable command
1210     SPD%        =    &H19    'serial poll disable command
1240     ATLISTEN%   =    &H20    'IBM-AT TO LISTEN
1270     ATTALK%     =    &H40    'IBM-AT TO TALK
1300 REM
1330 REM      Other variables and initialization.
1360 REM
1390     MTBUF$=SPACE$(40)
1420     CMD$ = SPACE$(10)        ' command buffer
1450     WRT$ = SPACE$(255)       ' write buffer
1480     RD$ = SPACE$(255)
1510     WRTSAVE$=SPACE$(255)
1540     UNIT% = &H1     'current unit to be controlled.
1570     RATE$="mm/sec":RG$="1"
1600     PATTERN$="3333333333"
1630     FOR I=1 TO 8:CHN$(I)=STR$(I):CHN$(I)=RIGHT$(CHN$(I),1):NEXT
1660 REM
1690 REM      Initial menu.
1720 REM
1750     KEY OFF:CLS:LOCATE 1,60:PRINT"Astro-Med, Inc. 1988"
1780     LOCATE 8,26:PRINT"MT9500 STRIP CHART RECORDER"
1810     LOCATE 10,26:PRINT"       CONTROL PROGRAM       "
1840     LOCATE 6,22:PRINT"-----------------------------------"
1870     LOCATE 22,26:PRINT"Press any key to continue"
1900     LOCATE 12,22:PRINT"-----------------------------------"
1930     LOCATE 14,22:PRINT"* MT9500 requires SCN x3.0 firmware.
1960     B$=INKEY$:IF B$=""THEN 1960
1990 REM
2020 REM    Prompt user for MT9500 options so program works for all
2050 REM    MT9500 customers. Not needed if customer does not send
2080 REM    commands for options not installed. See manual.
2110 REM
2140 CLS:LOCATE 4,22:PRINT"MT9500 Option Configuration"
2170 LOCATE 5,22:PRINT"--------------------------"
2200 LOCATE 7,8:PRINT"    To allow control program to work with all MT9500 config
2230 LOCATE 8,8:PRINT"the user needs to specify which options are installed. It
2260 LOCATE 9,8:PRINT"that all MT9500(s) have same option configurations."
2290 LOCATE 12,11:PRINT"Is AP-95 (Alphanumeric printing) option installed? (Y or
2320 M$=INKEY$:IF M$="" THEN 2320
2350 IF (M$="Y" OR M$="y") THEN AP%=1:GOTO 2440
2380 IF (M$="N" OR M$="n") THEN AP%=0:GOTO 2440
2410 GOTO 2290
2440 LOCATE 12,11:PRINT"Is OM-95 (Overlapping waveforms) option installed? (Y or
2470 M$=INKEY$:IF M$="" THEN 2470
2500 IF (M$="Y" OR M$="y") THEN OM%=1:GOTO 2590
2530 IF (M$="N" OR M$="n") THEN OM%=0:GOTO 2590
2560 GOTO 2440
2590 LOCATE 12,11:PRINT"Is DL-95 (Data Logger format) option installed? (Y or N)
2620 M$=INKEY$:IF M$="" THEN 2620
2650 IF (M$="Y" OR M$="y") THEN DL%=1:GOTO 2740
2680 IF (M$="N" OR M$="n") THEN DL%=0:GOTO 2740
2710 GOTO 2590
2740 LOCATE 12,11:PRINT"Is DC-95 (Data Capture ) option installed? (Y or N)
2770 M$=INKEY$:IF M$="" THEN 2770
2800 IF (M$="y" OR M$="Y") THEN DC%=1:GOTO 2890
2830 IF (M$="n" OR M$="N") THEN DC%=0:GOTO 2890
2860 GOTO 2740
2890 LOCATE 12,11:PRINT"Is EM-95 (Event Marker ) option installed? (Y or N)
2920 M$=INKEY$:IF M$="" THEN 2920
2950 IF (M$="y" OR M$="Y") THEN EM%=1:GOTO 3040
2980 IF (M$="n" OR M$="N") THEN EM%=0:GOTO 3040
3010 GOTO 2890
3040 LOCATE 12,11:PRINT"Is the DI-488 recording option installed? (Y or N) "
3070 M$=INKEY$:IF M$="" THEN 3070
3100 IF (M$="Y" OR M$="y") THEN DI%=1:GOTO 3190
3130 IF (M$="N" OR M$="n") THEN DI%=0:GOTO 3190
3160 GOTO 3040
3190 REM       Recorder configuration menu.
3220 CLS
3250 LOCATE 4,22:PRINT"MT9500 - GPIB Setup"
3280 LOCATE 5,22:PRINT"--------------------"
3310 LOCATE 7,52:PRINT "    ":LOCATE 7,1:LINE INPUT "Enter Number of MT9500 Recor
3340 IF (LEN(NUMREC$)=1 OR LEN(NUMREC$)=2) THEN 3370 ELSE 3310
3370 IF (LEN(NUMREC$)=1 AND NUMREC$="0") THEN 3310
3400 IF (LEN(NUMREC$)=1) THEN NUMSC%=VAL(NUMREC$):GOTO 3520
3430 NUMSC%=VAL(NUMREC$)
3460 IF NUMSC% > 15 THEN 3310
3490 REM
3520 CLS:PRINT"                    MT9500 Setup Instructions"
3550 PRINT"                  ------------------------":PRINT
3580 PRINT"       1 - Turn on the ";NUMSC%;" MT9500(s)."
3610 PRINT"       2 - Configure the GPIB address for the MT9500 units in order w
3640 PRINT"           addresses 01 up to the number of units selected, if not do
3670 PRINT"       3 - Place all units at READY level, if not at READY."
3700 PRINT:PRINT"           LLO (Local lockout) will be affect on all units."
3730 PRINT:PRINT"                                Press any key to begin"
3760 M$=INKEY$:IF M$="" THEN 3760
3790 REM
3820 REM   --  ------ --------------------
3850 REM      GPIB initialization.
3880 REM   - ------------------ ---- ------
3910 REM
3940     DEV$="GPIB0"
```

```
3970     CALL IBFIND (DEV$,GPIB0%)
4000     IF GPIB0% < 0 THEN 38320
4030 REM
4060 REM    Initialize Timeout value to 3 seconds for now.
4090 REM
4120     V%=12:CALL IBTMO(GPIB0%,V%)
4150 REM
4180 REM     Send interface clear to the GPIB.
4210 REM
4240     CALL IBSIC (GPIB0%)
4270 REM
4300 REM    Send REN (remote enable) active.
4330 REM
4360     V%=1:CALL IBSRE (GPIB0%,V%)     'SEND REN (REMOTE ENABLE)
4390 REM
4420 REM    Address talker, listener(s).
4450 REM
4480     CMD$=CHR$(ATTALK%)
4510     FOR I=1 TO NUMSC%
4540     CMD$=CMD$+CHR$(I+&H20)
4570     NEXT I
4600     CALL IBCMD (GPIB0%,CMD$)    'send talk and listen addresses.
4630     IF IBSTA% < 0 THEN 38470
4660 REM
4690 REM    Now do LLO (local lockout) on all devices.
4720 REM
4750     CMD$=CHR$(LLO%)
4780     CALL IBCMD(GPIB0%,CMD$)
4810     IF IBSTA% < 0 THEN 38470
4840 REM
4870 REM    Perform DEVICE CLEAR of MT9500(s) to default values.
4900 REM
4930     CMD$=CHR$(DCL%)
4960     CALL IBCMD (GPIB0%,CMD$)       'send DC device clear. Will affect all
4990     IF IBSTA% < 0 THEN 38470
5020 REM
5050 REM    Place MT9500(s) in unlisten state for now.
5080 REM
5110     CMD$=CHR$(UNL%)+CHR$(UNT%)
5140     CALL IBCMD(GPIB0%,CMD$)
5170     IF IBSTA% < 0 THEN 38470
5200 REM
5230 REM  -----    -          ----- -----------
5260 REM           MAIN CONTROL MENU
5290 REM  -----  --------------------------------
5320 REM   While at main level allow INTERLOCK SRQ so
5350 REM   as to detect a door open / out of paper situation.
5380 REM
5410    SMASK% = &H1:GOSUB 37150
5440    CLS
5470    LOCATE 2,19:PRINT"MT9500 RECORDER CONTROL PROGRAM"
5500    LOCATE 3,19:PRINT"--------------------------------":PRINT
5530    LOCATE 5,9:PRINT"Number of MT9500(s) in system: ";
5560    IF (NUMSC% >= 1 AND NUMSC%<=9) THEN 5590 ELSE 5620
5590    PRINT NUMSC%:LOCATE 5,40:PRINT "0":GOTO 5650  'put leading zero.
5620    PRINT NUMSC%
5650    LOCATE 6,9:PRINT"Primary GPIB Addresses of MT9500(s): 01 - ";
5680    IF (NUMSC% >= 1 AND NUMSC%<=9) THEN 5710 ELSE 5740
5710    PRINT NUMSC%;:LOCATE 6,51:PRINT "0":GOTO 5770
5740    PRINT NUMSC%
5770    LOCATE 8,9:PRINT"Current MT9500 controlled: ";
5800    IF (UNIT% >= 1 AND NUMSC% <=9) THEN 5830 ELSE 5860
5830    PRINT UNIT%;:LOCATE 8,36:PRINT "0":GOTO 5890
5860    PRINT UNIT%
5890    LOCATE 12,6
5920    PRINT"  ==========...==========...==========...==========...==========
```

```
5950 LOCATE 14,9:PRINT"1.   Formfeed.                    8. Plotter mode exampl
5980 LOCATE 15,9:PRINT"2.   Set Time/Date.               9. Rotated printing mo
6010 LOCATE 16,9:PRINT"3.   Analog Realtime.      "
6040 LOCATE 17,9:PRINT"4.   Line Printer.         "
6070 LOCATE 18,9:PRINT"5.   Data Capture.       "
6100 LOCATE 19,9:PRINT"6.   Data Logger.                 S.  Change current MT9
6130 LOCATE 20,9:PRINT"7.   Digital Data Recorder        X.  EXIT program (LOCA
6160 PRINT:PRINT"                              Enter Choice ";
6190 REM
6220 REM   While awaiting operator entry...check units for problems.
6250 REM   Only problem could be INTERLOCK situation!
6280 REM
6310    V%=1:CALL IBTMO(GPIB0%,V%)    'wait only for 10 us.
6340    MASK%=&H5100                  'wait for SRQ or timeout.
6370    CALL IBWAIT(GPIB0%,MASK%)
6400    IF (IBSTA% AND &H1000) THEN 6430 ELSE 6580
6430 REM
6460 REM   If SRQ, then do serial poll.
6490 REM
6520    GOSUB 39970:GOTO 5410  'inform operator of problem.
6550 REM
6580     NU$=INKEY$:IF NU$="" THEN 6190
6610     IF (NU$="X" OR NU$="x") THEN 19630
6640     IF (NU$="S" OR NU$="s") THEN 36580
6670     ON VAL(NU$) GOTO 14170,6760,15460,10690,21790,30310,32260,20050,3505
6700     GOTO 6580
6730 REM
6760 REM  ------------------------------------------------------
6790 REM           SET TIME AND DATE on MT9500(s).
6820 REM
6850 REM    Up to user whether works on the one active unit
6880 REM    or TIME/DATE is done on all units.
6910 REM  ------------------------------------------------------
6940 REM
6970 REM
7000 REM    Here to set time/date on only the 1 active unit.
7030 REM
7060 REM   Allow the MODE COMPLETE and COMMAND/DATA ERROR service request.
7090 REM
7120    SMASK% = &H6:GOSUB 37150   'enable bit 2,bit 1  in serv. mask byte.
7150 REM
7180 REM    Send command for SET TIME first (ESC E).
7210 REM
7240    WRT$=CHR$(&H1B)+"E":GOSUB 38770
7270 REM
7300 REM  Change timeout to 10 seconds.
7330 REM
7360    V%=13:CALL IBTMO (GPIB0%,V%)
7390 REM
7420 REM    Clear screen and go receive time from the active MT9500.
7450 REM
7480    CLS:GOSUB 35410        'put time in T$
7510 REM
7540 REM   Extract time for displaying.
7570 REM
7600    T$=MID$(T$,5,8):TIME$=T$
7630 REM
7660    LOCATE 11,26:PRINT"The current TIME is...."+T$
7690    LOCATE 13,16:PRINT"Enter new TIME or <Carriage Return> if no change "
7720    LOCATE 15,35:PRINT"HH:MM<CR>";:LOCATE 16,33:INPUT T$
7750 REM
7780 REM    Transmit data input by user to MT9500.
7810 REM
7840    WRT$=T$+CHR$(&HD):GOSUB 38770
7870 REM
7900 REM    After transferring data wait for a service request.
```

```
7960 REM ' or COMMAND/DATA ERROR meaning bad time...retransmit new time.
7990 REM
8020     MASK%=&H5100:CALL IBWAIT (GPIB0%,MASK%)
8050     IF (IBSTA% AND &HC000) <> 0 THEN GOSUB 38470
8080 REM
8110 REM   Since not error or timeout...must be SRQ...Do serial poll
8140 REM   Send UNL/SPE/MTA/Listen address of computer.
8170 REM
8200     CMD$=CHR$(UNL%)+CHR$(SPE%)+CHR$(UNIT% + &H40)+CHR$(ATLISTEN%)
8230     CALL IBCMD (GPIB0%,CMD$)
8260     IF IBSTA% < 0 THEN 38470
8290 REM
8320 REM   Now read status byte from unit.
8350 REM
8380     RD$=SPACE$(1):CALL IBRD(GPIB0%,RD$)
8410     IF IBSTA% < 0 THEN 38470
8440 REM
8470 REM   Complete serial poll.
8500 REM
8530     CMD$=CHR$(UNT%)+CHR$(ATTALK%)+CHR$(SPD%)+CHR$(UNT%)+CHR$(UNL%)
8560     CALL IBCMD(GPIB0%,CMD$)
8590 REM
8620 REM   Test STATUS BYTE from MT9500 for MODE COMPLETE/ERROR.
8650 REM
8680     IF (ASC(RD$) AND &H44) = &H44 THEN 8800  'if bit 2 hi then time ok.
8710 LOCATE 18,26:PRINT"*** BAD TIME, try again. ***";:FOR I = 1 TO 1500:NEXT I
8740 LOCATE 18,26:PRINT"                                    ";:GOTO 7690
8770 REM
8800 REM   After successful time... perform the date sequence.
8830 REM
8860 REM   Inform MT9500 to enter DATE change mode.
8890 REM
8920     WRT$=CHR$(&H1B)+"D":GOSUB 38770
8950 REM
8980     CLS:GOSUB 35800       'get date from all.
9010     A$=D$
9040 REM
9070 REM     Extract and prepare input DATE data for displaying.
9100 REM
9130     DAY$=LEFT$(A$,2)       'for display to operator
9160     A$=RIGHT$(A$,6)
9190     MONTH$=LEFT$(A$,3)
9220     YEAR$=RIGHT$(A$,2)
9250     IF MONTH$="JAN" THEN MONTH$="01"
9280     IF MONTH$="FEB" THEN MONTH$="02"
9310     IF MONTH$="MAR" THEN MONTH$="03"
9340     IF MONTH$="APR" THEN MONTH$="04"
9370 IF MONTH$="MAY" THEN MONTH$="05"
9400 IF MONTH$="JUN" THEN MONTH$="06"
9430 IF MONTH$="JUL" THEN MONTH$="07"
9460 IF MONTH$="AUG" THEN MONTH$="08"
9490 IF MONTH$="SEP" THEN MONTH$="09"
9520 IF MONTH$="OCT" THEN MONTH$="10"
9550 IF MONTH$="NOV" THEN MONTH$="11"
9580 IF MONTH$="DEC" THEN MONTH$="12"
9610 A$ = MONTH$+"-"+DAY$+"-"+YEAR$
9640 REM DATE$=A$
9670 LOCATE 11,24:PRINT"The current DATE is...."+D$
9700 LOCATE 13,16:PRINT"Enter new DATE or <Carriage Return> if no change ";
9730 LOCATE 15,35:PRINT"MM/DD/YY<CR>":LOCATE 16,33:INPUT D$
9760 REM
9790 REM   Send new date to MT9500.
9820 REM
9850     WRT$=D$+CHR$(&HD):GOSUB 38770
9880 REM
9940 REM   date signalled by MODE COMPLETE SRQ or DATA ERROR SRQ.
9970 REM
10000    MASK%=&H5100:CALL IBWAIT(GPIB0%,MASK%)
10030    IF (IBSTA% AND &HC000) <> 0 THEN GOSUB 38470
10060 REM
10090 REM  Since not error or timeout...must be SRQ...Do serial poll.
10120 REM
10150    CMD$=CHR$(UNL%)+CHR$(SPE%)+CHR$(UNIT% + &H40)+CHR$(ATLISTEN%)
10180    CALL IBCMD(GPIB0%,CMD$)
10210    IF IBSTA% < 0 THEN 38470
10240 REM   Read status byte.
10270    RD$=SPACE$(1):CALL IBRD(GPIB0%,RD$)
10300    IF IBSTA% < 0 THEN 38470
10330 REM   Complete the serial poll.
10360    CMD$=CHR$(UNT%)+CHR$(ATTALK%)+CHR$(SPD%)+CHR$(UNT%)+CHR$(UNL%)
10390    CALL IBCMD(GPIB0%,CMD$)
10420 REM
10450 REM   Test status byte from MT9500 for MODE COMPLETE/ERROR.
10480 REM
10510    IF (ASC(RD$) AND &H44) = &H44 THEN 10630
10540 REM   Alarm operator of error and accept new entry.
10570    LOCATE 18,26:PRINT"*** BAD DATE, try again. ***";:FOR I = 1 TO 1500:N
10600    LOCATE 18,26:PRINT"                                    ";:GOTO 9700
10630    GOTO 5410   'return to main menu.
10660 REM
10690 REM    ------------------------------------------
10720 REM    Control an MT9500 as 80 column Line Printer
10750 REM    ------------------------------------------
10780 REM
10810    CLS:LOCATE 4,25
10840    PRINT"MT-9500 PRINTER MODES"
10870    LOCATE 5,25:PRINT"--------------"
10900    LOCATE 8,20:PRINT"1. Normal (standard) character format."
10930    LOCATE 10,20:PRINT"2. Compressed screen print format."
10960    A$=INKEY$:IF A$=""THEN 10960
10990 IF (A$="1") OR (A$="2") THEN 11050
11020 GOTO 10960
11050 CLS:LOCATE 4,21
11080 PRINT"1. LINE PRINT FORMAT"
11110 LOCATE 6,21:PRINT"2. PAGE PRINT FORMAT"
11140 B$=INKEY$:IF B$="" THEN 11140
11170 IF B$="1" OR B$="2" THEN 11230
11200 GOTO 11050
11230 IF A$="1" THEN 11320
11260 WRT$=CHR$(&H1B)+"S"+B$        'ESC S x  for compressed
11290 GOTO 11350
11320 WRT$=CHR$(&H1B)+"P"+B$        'ESC P x for standard
11350 WRTSAVE$=WRT$:CLS
11380 LOCATE 10,26:PRINT"Enter Command or File name"
11410 REM
11440 LOCATE 12,34:PRINT STRING$(12," ")
11470 LOCATE 14,21:PRINT" EX to Exit"
11500 LOCATE 16,21:PRINT" DIRA - directory of Drive A"
11530 LOCATE 17,21:PRINT" DIRB - directory of Drive B"
11560 LOCATE 18,21:PRINT" DIRC - directory of Drive C"
11590 LOCATE 12,32:INPUT FILE$
11620 IF FILE$="" THEN 11350
11650 IF FILE$="EX" OR FILE$="ex" THEN 5680
11680 IF FILE$="DIRA" OR FILE$="dira" THEN 11800
11710 IF FILE$="DIRB" OR FILE$="dirb" THEN 11860
11740 IF FILE$="DIRC" OR FILE$="dirc" THEN 11920
11770 GOTO 12010
11800 CLS:LOCATE 1,1:FILES "A:"          'directory of A
11830 GOTO 11950
11860 CLS:LOCATE 1,1:FILES "B:"          'directory of B
```

```
11890 GOTO 11950
11920 CLS:LOCATE 1,1:FILES "C:"          'directory of C
11950 LOCATE 25,18:PRINT"Press any Key to exit";
11980 L$=INKEY$:IF L$="" THEN 11980 ELSE GOTO 11350
12010 REM
12040 REM    Prior to entering line printer mode... prepare the service
12070 REM    request mask byte of MT9500 to do SRQ on INTERLOCK or on
12100 REM    MODE COMPLETE.
12130 REM
12160 SMASK% = &H5          'enable bits 0,2
12190 GOSUB 37150           'inform selected MT9500 of mask byte.
12220 REM
12250 REM    WRT$=string to enter MT9500 into line printer mode....send it!
12280 REM
12310 WRT$=WRTSAVE$:GOSUB 38800
12340 REM
12370 CLS:LOCATE 18,27:PRINT"Press 'X' to End Printout"
12400 LOCATE 9,27:PRINT "Printout in progress"
12430 OPEN FILE$ FOR INPUT AS #2
12460 IF EOF(2) THEN 12940
12490 LINE INPUT #2,A$
12520 WRT$=A$+CHR$(&HD)+CHR$(&HA)
12550 REM
12580 REM    Prepare and send line of data for printing.
12610    V%=1:CALL IBTMO(GPIB0%,V%)  'quick check of MT9500 for SRQ.
12640    MASK%=&H5100:CALL IBWAIT(GPIB0%,MASK%)
12670    IF (IBSTA% AND &H1000) THEN GOSUB 39940
12700    V%=14:CALL IBTMO (GPIB0%,V%)  'long time out.
12730    CMD$=CHR$(UNIT% + &H20)+CHR$(ATTALK%)
12760    CALL IBCMD (GPIB0%,CMD$)
12790    IF (IBSTA% AND &H1000) THEN GOSUB 39940:GOTO 14080
12820    CALL IBWRT (GPIB0%,WRT$)
12850    IF (IBSTA% AND &HC000) THEN GOSUB 39940:GOTO 14080
12880    M$=INKEY$
12910    IF M$="" THEN 12460 ELSE IF M$="X" OR M$="x" THEN 12940 GOTO 12460
12940    M$="":CLOSE #2:WRT$=CHR$(&HB):GOSUB 38800
12970    CMD$=CHR$(UNT%)+CHR$(UNL%)
13000    CALL IBCMD(GPIB0%,CMD$)
13030 REM
13060 REM   Wait for MT9500 to inform of MODE COMPLETION and IDLE.
13090 REM
13120    V%=13:CALL IBTMO(GPIB0%,V%)   '10 second timeout.
13150 REM
13180 MASK%=&H5000  'SRQ or timeout
13210 CALL IBWAIT(GPIB0%,MASK%)
13240 REM
13270 REM   Wait for MT9500 to set SRQ (complete formfeed)
13300 REM   or timeout.
13330 REM
13360 IF (IBSTA% AND &HC000) <> 0 THEN GOSUB 38470
13390 IF (IBSTA% AND &H1000) THEN 13450
13420 GOTO 13180
13450 REM
13480 REM  Since not timeout or error then must be SRQ.
13510 REM  Do a serial poll.
13540 REM   Send UNLISTEN , Ser. Poll Enable, Device talk, and Computer listen
13570 REM
13600    CMD$=CHR$(UNL%)+CHR$(SPE%)+CHR$(UNIT% + &H40)+CHR$(ATLISTEN%)
13630    CALL IBCMD (GPIB0%,CMD$)
13660    IF IBSTA% < 0 THEN GOSUB 38470
13690 REM
13720 REM  Now read status byte.
13750 REM
13780    RD$=SPACE$(1):CALL IBRD(GPIB0%,RD$)
13810    IF IBSTA%<0 THEN 38470
13840    IF (ASC(RD$) AND &H44) = &H44 THEN 13870
13870 REM
13900 REM   Complete serial poll.
13930 REM
13960    CMD$=CHR$(UNT%)+CHR$(ATTALK%)+CHR$(SPD%)+CHR$(UNT%)+CHR$(UNL%)
13990    CALL IBCMD(GPIB0%,CMD$)
14020    GOTO 5410   'go back to MAIN MENU
14050 REM
14080 CLS:LOCATE 18,27:PRINT"Press 'X' to End Printout"
14110 LOCATE 9,27:PRINT "Printout in progress"
14140 GOTO 12730
14170 REM  ---------------------------------------
14200 REM              FORMFEED
14230 REM  ---------------------------------------
14260 REM   Allow INTERLOCK and MODE COMPLETE service requests.
14290 REM
14320    SMASK% = &H5    'Enable bits 0,2
14350    GOSUB 37150     'routine to change mask byte in MT9500.
14380 REM
14410    WRT$=CHR$(&H1B)+"F":GOSUB 38770      'ESC F to selected MT9500.
14440 REM
14470 REM    Wait for MT9500 to either complete the MODE or
14500 REM    possibly INTERLOCK situation.
14530 REM    Extend timeout for formfeed to 10 seconds.
14560 REM
14590    V%=13:CALL IBTMO (GPIB0%,V%)
14620    MASK%=&H5100  'SRQ or timeout
14650    CALL IBWAIT (GPIB0%,MASK%)
14680 REM
14710 REM   Wait for MT9500 to set SRQ (complete formfeed)
14740 REM   or timeout.
14770 REM
14800    IF (IBSTA% AND &HC000) <> 0 THEN GOSUB 38470
14830 REM
14860 REM  Since not timeout or error then must be SRQ.
14890 REM  Do a serial poll.
14920 REM
14950 REM   Send UNL,SPD,MTA,MLA
14980 REM
15010    CMD$=CHR$(UNL%)+CHR$(SPE%)+CHR$(UNIT% + &H40)+CHR$(ATLISTEN%)
15040    CALL IBCMD (GPIB0%,CMD$)
15070    IF IBSTA% < 0 THEN GOSUB 38470
15100    RD$=SPACE$(1):CALL IBRD(GPIB0%,RD$)
15130    IF IBSTA%<0 THEN 38470
15160    IF (ASC(RD$) AND &H44) = &H44 THEN 15220
15190    GOTO 40870
15220 REM
15250 REM   Complete serial poll.
15280 REM
15310    CMD$=CHR$(UNT%)+CHR$(ATTALK%)+CHR$(SPD%)+CHR$(UNT%)+CHR$(UNL%)
15340    CALL IBCMD(GPIB0%,CMD$)
15370 REM
15400    GOTO 5410   'go back to MAIN MENU
15430 REM
15460 REM  ------------------------------------
15490 REM        ANALOG REAL TIME RECORDER
15520 REM  ------------------------------------
15550 REM
15580 REM   Initialize variables.
15610 REM
15640    GRIDFLAG$="1"
15670    FOR I=1 TO 8:SI$(I)="0":NEXT I
15700    HALT$="1"
15730    FOR I=1 TO 8:EM$(I)="ON":IA$(I)="0":NEXT I
15760 REM
15790 REM     Place menu on screen
15820 REM
```

```
15850    CLS:LOCATE 3,13:PRINT"R E A L T I M E   O S C I L L O G R A P H  R E
15880    LOCATE 4,13:PRINT"-------------------------------------------------
15910    LOCATE 10,19:PRINT"1.    8  CHANNEL RECORDER FORMAT."
15940    LOCATE 12,19:PRINT"2.   OVERLAP FORMAT."
15970    M$=INKEY$:IF M$="" THEN 16000
16000    IF M$="1" THEN MODE$="8":GOTO 16120
16030    IF M$="2" THEN MODE$="2":GOTO 16120
16060    GOTO 15970
16090 REM
16120 REM   Disable triggered imediate snapshot by TRIGGER OFF command.
16150 REM   Then enter recorder into the real time mode.
16180 REM
16210    WRT$=CHR$(&H1B)+"Z"+CHR$(9)+"-"+CHR$(&HD)+CHR$(&H18):GOSUB 38800
16240    SMASK%=&H5:GOSUB 37150    'allow INTERLOCK and MODE complete int's
16270 REM
16300    WRT$=CHR$(&H1B)+"R"+MODE$:GOSUB 38800
16330 REM
16360 REM    Display main menu.
16390 REM
16420    CLS:LOCATE 3,13:PRINT"R E A L T I M E   O S C I L L O G R A P H   C O N
16450    LOCATE 4,13:PRINT"-------------------------------------------------
16480    LOCATE 8,9:PRINT"(ST)  Start/Stop"
16510    LOCATE 9,9:PRINT"(GR)  Grid control"
16540    LOCATE 10,9:PRINT"(SP)  Speed Control"
16570    LOCATE 11,9:PRINT"(EX)  Exit operation"
16600    LOCATE 16,32:PRINT"Enter a Command";
16630    LOCATE 16,48:PRINT"     "
16660 REM
16690    V%=1:CALL IBTMO(GPIB0%,V%)
16720    MASK% = &H5100
16750    CALL IBWAIT(GPIB0%,MASK%)
16780    IF (IBSTA% AND &H1000) THEN 16810 ELSE 16870
16810    GOSUB 39970:GOTO 16420      'do serial poll and inform operator.
16840 REM
16870    A$=INKEY$:IF A$="" THEN 16660
16900    IF (A$)="A" AND A$(="Z") OR (A$)="a" AND A$(="z") THEN 16960
16930    PRINT CHR$(7);:GOTO 16630
16960    LOCATE 16,49:PRINT"'";A$;
16990    B$=INKEY$:IF B$="" THEN 16990
17020    IF (B$)="A" AND B$(="Z") OR (B$)="a" AND B$ (="z") THEN 17080
17050    PRINT CHR$(7);:GOTO 16630
17080    LOCATE 16,50:PRINT B$;"'";
17110 A$=A$+B$
17140 IF A$="st" OR A$="ST" THEN 17290
17170 IF A$="gr" OR A$="GR" THEN 17500
17200 IF A$="EX" OR A$="ex" THEN 18160
17230 IF A$="SP" OR A$="sp" THEN 18430
17260 GOTO 16630
17290 REM  ------------------------------
17320 REM    Here on HALT/RUN command.
17350 REM  ------------------------------
17380    IF HALT$="1" THEN HALT$="0" ELSE HALT$="1"
17410    WRT$=CHR$(&H13):GOSUB 38800
17440    GOTO 16420
17470 REM
17500 REM  ------------------------------
17530 REM   Here on grid control.
17560 REM  ------------------------------
17590 REM
17620    CLS:LOCATE 3,23:PRINT"MT9500 GRID CONTROL"
17650    LOCATE 4,23:PRINT"--------------------"
17680    LOCATE 6,23:PRINT"1.    Turn grid ON."
17710    LOCATE 7,23:PRINT"2.    Turn grid OFF."
17740    A$=INKEY$:IF A$="" THEN 17740
17770    IF A$="1" THEN GRIDFLAG$="+" ELSE GRIDFLAG$="-"
17800 REM
17830 REM
17860    WRT$=CHR$(&H18):GOSUB 38800  'exit r.t. mode
17890    GOSUB 39310                  'await SRQ for exiting a MODE.
17920    WRT$=CHR$(&H1B)+"Z"+CHR$(&H1)+GRIDFLAG$+CHR$(&HD):GOSUB 38800
17950    WRT$=CHR$(&H18):GOSUB 38800   'exit setup mode
17980    GOSUB 39310                  'await SRQ for MODE COMPLETE.
18010    WRT$=CHR$(&H1B)+"R"+MODE$:GOSUB 38800    're-enter realtime mode.
18040    IF HALT$="0" THEN 18070 ELSE 18100
18070    WRT$=CHR$(&H13):GOSUB 38800
18100    GOTO 16420   'back to menu
18130 REM
18160 REM   ------------------------------
18190 REM      Here on an exit command.
18220 REM   ------------------------------
18250 REM
18280     WRT$=CHR$(&H18):GOSUB 38800      'exit command then serial poll
18310 REM
18340     GOSUB 39310                      'await SRQ for mode complete.
18370     GOTO 5410    'back to main menu.
18400 REM
18430 REM    ------------------------------
18460 REM      Here on speed change.
18490 REM    ------------------------------
18520 REM
18550 CLS:LOCATE 3,22:PRINT"MT9500 REALTIME SPEED CONTROL"
18580 LOCATE 4,22:PRINT"------------------------------"
18610 LOCATE 8,5:PRINT STRING$(70," ");
18640 LOCATE 11,5:PRINT STRING$(70," ");
18670 LOCATE 7,32:PRINT"Set motor speed";
18700 LOCATE 9,16:PRINT"Type in a number from 1 to 100 to set the speed."
18730 LOCATE 11,35:PRINT"Speed =   <cr>";
18760 A$="":B$="":C$="":LOCATE 11,42:PRINT"   ";
18790 WRT$=CHR$(&HE):GOSUB 38800
18820 A$=INKEY$:IF A$="" THEN 18820
18850 IF A$<"1" OR A$>"9" THEN 18820 ELSE LOCATE 11,42:PRINT A$;
18880 B$=INKEY$:IF B$="" THEN 18880
18910 IF B$=CHR$(&HD) THEN 19150
18940 IF B$=CHR$(8) THEN 18760
18970 IF B$<"0" OR B$>"9" THEN 18880 ELSE LOCATE 11,43:PRINT B$;
19000 C$=INKEY$:IF C$="" THEN 19000
19030 IF C$=CHR$(&HD) THEN 19150
19060 IF C$=CHR$(&H8) THEN 18760
19090 IF C$<>"0" THEN 19000
19120 LOCATE 11,44:PRINT C$
19150 SP$=A$+B$+C$
19180 SP%=VAL(SP$):IF SP%<1 OR SP%>100 THEN 18730
19210 SD%=62500!/SP%:SP$=HEX$(SD%):A$=SPACE$(4):RSET A$=SP$:S$=A$:WRT$=S$:GOSUB
19240 CLS:LOCATE 23,5:PRINT STRING$(30," ");
19270 LOCATE 23,15:PRINT"1. mm/sec";
19300 LOCATE 23,35:PRINT"2. mm/min";
19330 LOCATE 23,55:PRINT"3. mm/hour";
19360 LOCATE 25,32:PRINT"Choose a number   <enter>";
19390 A$=INKEY$:IF A$="" THEN 19390
19420 IF A$=CHR$(&HD) THEN 19540
19450 IF A$=CHR$(&H8) THEN A$="":LOCATE 25,49:PRINT A$;"  ";:GOTO 19390
19480 IF A$<"1" OR A$>"3" THEN 19390
19510 LOCATE 25,49:PRINT A$;:RG$=A$:GOTO 19390
19540 WRT$=RG$:GOSUB 38800
19570 GOTO 16420
19600 REM
19630 REM ------------------------------------------------------
19660 REM     Here to return units to LOCAL and exit program.
19690 REM ------------------------------------------------------
19720 REM
19750    CMD$=CHR$(UNL%)+CHR$(ATTALK%) 'devices unlisten and comp. to talk
19780    FOR I=1 TO NUMSC%             'attach all listeners.
```

```
19810     CMD$=CMD$+CHR$(I+&H20)
19840     NEXT I
19870     CMD$=CMD$+CHR$(GTL%)+CHR$(UNL%)+CHR$(UNT%) 'attach GTL message...and UN
19900     CALL IBCMD(GPIB0%,CMD$)
19930     IF IBSTA% < 0 THEN 5620
19960     CALL IBSIC(GPIB0%)        'clear interface.
19990     CLOSE:CLS:END             'close files,clear screen, exit to basic
20020 REM
20050 REM  --------------------------------
20080 REM        PLOTTER MODE EXAMPLE
20110 REM  --------------------------------
20140 REM
20170 REM   Enable INTERLOCK and MODE COMPLETE SRQ's on MT9500
20200 REM
20230     SMASK%=&H5:GOSUB 37150
20260 REM
20290 REM   Enter MT9500 into plotter mode.
20320 REM
20350     WRT$=CHR$(&H1B)+"K":GOSUB 38800
20380 REM
20410 REM   New display for operator.
20440     CLS
20470     LOCATE 3,18:PRINT"PLOTTER MODE CONTROL"
20500     LOCATE 4,18:PRINT----------------------"
20530     LOCATE 8,5:PRINT"The MT9500 should be printing a simple pattern..."
20560     LOCATE 10,5:PRINT"Press X to exit plotting example....";
20590 REM
20620 REM   During transmission monitor any SRQ's from recorder.
20650 REM
20680      V%=10:CALL IBTMO(GPIB0%,V%)       '1 second timeout
20710      WRT$="D"+CHR$(10)+CHR$(0)+"3333333333"+CHR$(&HFF) '1 print packet
20740      CMD$=CHR$(UNIT%+&H20)+CHR$(ATTALK%)  'MLA and MLA
20770      CALL IBCMD(GPIB0%,CMD$)
20800      IF (IBSTA% AND &H1000) THEN GOSUB 39940:GOTO 20440
20830      CALL IBWRT(GPIB0%,WRT$)           'send data.
20860      IF (IBSTA% AND &HC000) THEN GOSUB 39940:GOTO 20440
20890      IF IBSTA%<0 THEN 38470
20920 REM
20950 REM   While sending data and awaiting operator input check for paper out.
20980 REM
21010      V%=1:CALL IBTMO(GPIB0%,V%)    '10 us.
21040      MASK%=&H5100                  'wait for SRQ or timeout.
21070      CALL IBWAIT(GPIB0%,MASK%)
21100      IF (IBSTA% AND &H1000) THEN GOSUB 39940
21130 REM
21160     M$=INKEY$:IF M$="X" OR M$="x" THEN 21250 ELSE 20680
21190 REM
21220 REM    Exit the PLOTTER mode.
21250     WRT$="C"+CHR$(&H1B):GOSUB 38800
21280 REM
21310 REM   After exiting MT9500 from plotting...await SRQ (mode complete).
21340 REM
21370      V%=13:CALL IBTMO(GPIB0%,V%)    '3 seconds before timeout
21400      MASK%=&H5100
21430      CALL IBWAIT(GPIB0%,MASK%)
21460      IF (IBSTA% AND &HC000) <> 0 THEN 38470
21490      CMD$=CHR$(UNL%)+CHR$(SPE%)+CHR$(UNIT% + &H40)+CHR$(ATLISTEN%)
21520      CALL IBCMD (GPIB0%,CMD$)
21550      IF IBSTA% < 0 THEN 38470
21580      RD$=SPACE$(1):CALL IBRD(GPIB0%,RD$)
21610      IF IBSTA% < 0 THEN 38470
21640      IF (ASC(RD$) AND &H44) = &H44 THEN 21700
21670      GOTO 40870
21700      CMD$=CHR$(UNT%)+CHR$(ATTALK%)+CHR$(SPD%)+CHR$(UNT%)+CHR$(UNL%)
21730      CALL IBCMD (GPIB0%,CMD$)
21760      GOTO 5410                      'back to main menu
21790 REM  ------------------------------------
21820 REM            DATA CAPTURE
21850 REM  ------------------------------------
21880 REM
21910     CLS:LOCATE 3,22:PRINT"DATA CAPTURE"
21940     LOCATE 4,22:PRINT"------------"
21970     IF DC%=1 THEN 22060
22000     LOCATE 8,20:PRINT"DC-95 OPTION not installed":FOR I = 1 TO 3000:NEXT
22030     GOTO 5410
22060     RES$="10":WND$="03":TPOS$="1":TCH$="1"
22090 REM
22120 REM   Initial Menu.
22150 REM
22180     LOCATE 10,19:PRINT"1. acquire snapshot"
22210     LOCATE 11,19:PRINT"2. playback from MT9500 memory"
22240     LOCATE 12,19:PRINT"3. playback from disk"
22270     LOCATE 13,19:PRINT"4. save MT9500 data memory on disk"
22300     LOCATE 15,19:PRINT"5. return to main menu"
22330     LOCATE 23,19:PRINT"enter a number: "
22360     M$=INKEY$:IF M$="" THEN 22360
22390     IF M$="1" GOTO 22660
22420     IF M$="2" GOTO 26140
22450     IF M$="3" GOTO 29200
22480     IF M$="4" GOTO 27490
22510     IF M$="5" THEN GOTO 5410
22540     GOTO 22360
22570 REM
22600 REM   Here on acquisition control.
22630 REM
22660     CLS:LOCATE 3,23:PRINT"ACQUIRE SNAPSHOT"
22690     LOCATE 10,19:PRINT"1. start immediate snapshot"
22720     LOCATE 11,19:PRINT"2. start triggered snapshot"
22750     LOCATE 13,19:PRINT"3. show/change number of samples"
22780     LOCATE 14,19:PRINT"4. show/change resolution"
22810     LOCATE 15,19:PRINT"5. show/change trigger settings"
22840     LOCATE 20,19:PRINT"6. exit snapshot menu"
22870     NU$=INKEY$:IF NU$="" THEN 22870
22900     IF NU$="1" THEN GOTO 23200
22930     IF NU$="2" THEN GOTO 23620
22960     IF NU$="3" THEN GOTO 24160
22990     IF NU$="4" THEN GOTO 24790
23020     IF NU$="5" THEN GOTO 25420
23050     IF NU$="6" THEN GOTO 21910
23080     GOTO 22870              'back to menu
23110 REM
23140 REM   Inform MT9500 to do snapshot and inform user of operation.
23170 REM
23200     CLS:LOCATE 3,13:PRINT"       snapshot in progress"
23230     SMASK%=&H0:GOSUB 37150    'MT9500 no SRQ's during setup.
23260     WRT$=CHR$(&H1B)+"Z":GOSUB 38800        'enter setup
23290     WRT$=CHR$(&H9)+"-"+CHR$(&HD):GOSUB 38800    'disable trigger
23320     WRT$=CHR$(&H18):GOSUB 38800    'exit setup
23350     SMASK%=&H4:GOSUB 37150      'only allow MODE COMPLETE service request.
23380     WRT$=CHR$(&H1B)+"M":GOSUB 38800  'tell MT9500 to do snapshot of signals
23410 REM
23440 REM   Await the MODE COMPLETE service request (ACQUIS. completed)
23470 REM
23500     V%=13:CALL IBTMO(GPIB0%,V%)    '30 second max. for ACQ. to complete
23530     GOSUB 39580     'await for MODE COMPLETE.
23560     GOTO 21910      'back to menu when done.
23590 REM
23620 REM   Here on triggered snapshot.
23650 REM
23680     CLS:LOCATE 3,9:PRINT"Triggered snapshot in progress...trigger required.
23710     SMASK%=&H0:GOSUB 37150
23740     WRT$=CHR$(&H1B)+"Z":GOSUB 38800                          'enter set up
```

```
23770     WRT$=CHR$(&H9)+"+"+CHR$(&HD):GOSUB 38800                'trig on
23800     WRT$=CHR$(&H18):GOSUB 38800
23830     SMASK%=&H4:GOSUB 37150
23860     WRT$=CHR$(&H1B)+"M":GOSUB 38800                         'take snapshot
23890 REM
23920 REM   Await the MODE COMPLETE SRQ from MT9500.
23950 REM
23980     V%=0:CALL IBTMO(GPIB0%,V%)  'infinite (duration depends on trigger)
24010     GOSUB 39580
24040     GOTO 21910     'back to main menu.
24070 REM
24100 REM    Here to change the window size.
24130 REM
24160     CLS:PRINT:PRINT"present window size is "+WND$+" Ksamp"
24190     PRINT:PRINT"choose  1.  1 Ksamp"
24220     PRINT"          2.  3 Ksamp"
24250     PRINT"          3.  5 Ksamp"
24280     PRINT"          4. 10 Ksamp"
24310     PRINT"          5. 16 Ksamp"
24340     PRINT" any other key for no change"
24370     M$=INKEY$: IF M$="" THEN GOTO 24370
24400     IF M$="1" THEN WND$="01":GOTO 24580
24430     IF M$="2" THEN WND$="03":GOTO 24580
24460     IF M$="3" THEN WND$="05":GOTO 24580
24490     IF M$="4" THEN WND$="10":GOTO 24580
24520     IF M$="5" THEN WND$="16":GOTO 24580
24550     GOTO 22660
24580     WRT$=CHR$(&H1B)+"Z":GOSUB 38800
24610     WRT$=CHR$(4)+"8"+WND$+CHR$(&HD):GOSUB 38800    'change it
24640     WRT$=CHR$(&H18):GOSUB 38800
24670     GOTO 22660
24700 REM
24730 REM    Here to change the resolution (storage rate).
24760 REM
24790     CLS:PRINT:PRINT"present resolution is "+RES$+" msec/mm"
24820     PRINT:PRINT"choose  1.  1 msec/mm"
24850     PRINT"          2.  2 msec/mm"
24880     PRINT"          3.  5 msec/mm"
24910     PRINT"          4. 10 msec/mm"
24940     PRINT"          5. 20 msec/mm"
24970     PRINT" any other key for no change"
25000     M$=INKEY$: IF M$="" THEN GOTO 25000
25030     IF M$="1" THEN RES$="01":GOTO 25210
25060     IF M$="2" THEN RES$="02":GOTO 25210
25090     IF M$="3" THEN RES$="05":GOTO 25210
25120     IF M$="4" THEN RES$="10":GOTO 25210
25150     IF M$="5" THEN RES$="20":GOTO 25210
25180     GOTO 22660
25210     WRT$=CHR$(&H1B)+"Z":GOSUB 38800
25240     WRT$=CHR$(3)+RES$+CHR$(&HD):GOSUB 38800    'change it
25270     WRT$=CHR$(&H18):GOSUB 38800
25300     GOTO 22660
25330 REM
25360 REM    Here to change the trigger channel.
25390 REM
25420 CLS:PRINT:PRINT"present trigger channel is "+TCH$
25450 PRINT:PRINT"enter new trigger channel"
25480 PRINT"or any other key to continue"
25510 M$=INKEY$: IF M$="" THEN GOTO 25510
25540 IF M$>"0" AND M$<"9" THEN TCH$=M$
25570 IF TPOS$="1" THEN WRT$="start"
25600 IF TPOS$="2" THEN WRT$="center"
25630 IF TPOS$="3" THEN WRT$="end"
25660 PRINT:PRINT"present trigger is at "+WRT$+" of trace"
25690 PRINT:PRINT"other trigger settings determined by front panel controls"
25720 PRINT:PRINT"enter 1 for start"
25750 PRINT"      2 for center"
25780 PRINT"      3 for end"
25810 PRINT" any other key for no change"
25840 M$=INKEY$:IF M$="" THEN GOTO 25840
25870 IF M$>"0" AND M$<"4" THEN TPOS$=M$:GOTO 25930
25900 GOTO 22660
25930 WRT$=CHR$(&H1B)+"Z":GOSUB 38800
25960 WRT$=CHR$(5)+TPOS$+CHR$(&HD):GOSUB 38800
25990 WRT$=CHR$(&HB)+TCH$+CHR$(&HD):GOSUB 38800    'change it
26020 WRT$=CHR$(&H18):GOSUB 38800
26050 GOTO 22660
26080 REM
26110 REM
26140    CLS:LOCATE 3,17:PRINT"PLAYBACK MT9500 MEMORY"
26170    LOCATE 10,19:PRINT"1. 40 mm channels"
26200    LOCATE 11,19:PRINT"2. 160 mm channels (overlap)"
26230    IF OM%=1 THEN 26290
26260    LOCATE 11,19:PRINT"2. NOT ACTIVE (overlap mode not installed)"
26290    LOCATE 12,19:PRINT"3. X-Y PLOT of channels 1 and 2"
26320    LOCATE 13,19:PRINT"4. numeric listing"
26350 REM
26380    LOCATE 20,19:PRINT"5. exit playback menu"
26410    NU$=INKEY$:IF NU$="" THEN 26410
26440    IF NU$="1" THEN GOTO 26710
26470    IF NU$="2" THEN GOTO 26710
26500    IF NU$="3" THEN GOTO 26710
26530    IF NU$="4" THEN GOTO 26710
26560 REM
26590    IF NU$="5" THEN RETRY%=0:GOTO 21910
26620    GOTO 26410                'bad entry
26650 REM
26680    V%=0:CALL IBTMO (GPIB0%,V%)  'eliminate timeout.
26710    SMASK% = &H5:GOSUB 37150     'allow INTERLOCK or MODE COMPLETE SRQ.
26740    WRT$=CHR$(&H1B)+"N"+NU$:GOSUB 38800  'enter PLAYBACK MODE.
26770    CLS:LOCATE 3,22:PRINT"PLAYBACK IN PROGRESS"
26800    WRT$=CHR$(&H13):GOSUB 38800   'inform MT9500 to begin.
26830    V%=0:CALL IBTMO(GPIB0%,V%)    'disable timeout.
26860    MASK%=&H5100      'wait for an SRQ from MT9500.
26890    CALL IBWAIT(GPIB0%,MASK%)
26920    IF (IBSTA% AND &H1000) THEN 26950 ELSE 26890
26950    CMD$=CHR$(UNL%)+CHR$(SPE%)+CHR$(UNIT%+&H40)+CHR$(ATLISTEN%)
26980    CALL IBCMD (GPIB0%,CMD$)
27010    IF IBSTA% < 0 THEN 38470
27040    RD$=SPACE$(1):CALL IBRD(GPIB0%,RD$)
27070    CMD$=CHR$(UNT%)+CHR$(ATTALK%)+CHR$(SPD%)+CHR$(UNT%)+CHR$(UNL%)
27100    CALL IBCMD (GPIB0%,CMD$)
27130    IF (ASC(RD$) AND &H44) = &H44 THEN 27190 ELSE 27310
27160 REM  Since not interlock, must be MODE COMPLETE srq.
27190    GOTO 26140  'main playback menu.
27220 REM
27250 REM    Here to display problem and wait for it to be corrected.
27280 REM
27310     CLS:LOCATE 8,17:PRINT"* *  INTERLOCK PROBLEM WITH MT9500 * *"
27340     LOCATE 11,10
27370     PRINT"MT9500 is out of paper OR door open...CORRECT THE PROBLEM !"
27400     GOSUB 40480:CLS:LOCATE 3,22:PRINT"PLAYBACK IN PROGRESS"
27430     GOTO 26830
27460 REM
27490 REM   --- Here to offload MT9500 data to COMPUTER.
27520 REM
27550   CLS:LOCATE 3,13:PRINT"Transfer from MT9500 to disk"
27580   LOCATE 5,13:PRINT"data will be sent to files MTDATA1.DAT thru MTDATA8.DA
27610   LOCATE 9,13:PRINT"enter drive (A,B,C,D): "
27640   REM
27670 REM   Set up the disk drive & filenames.
27700   GOSUB 28840          'setup filenames
```

```
27730   GOSUB 28720     'get format for saving of data.
27760   SMASK%=&H4:GOSUB 37150    'allow only mode complete SRQ.
27790   WRT$=CHR$(&H1B)+"U"+FORMAT$:GOSUB 38800    'enter UPLOAD mode.
27820   GOSUB 36220               'ignore first byte sent from MT9500.
27850   GOSUB 36220:WND$=A$
27880   GOSUB 36220:WND$=WND$+A$ 'got window size.
27910   IF WND$="00" THEN 28000
27940   WRT$=CHR$(&H13):GOSUB 38800  'start transfer
27970   GOTO 28210
28000   LOCATE 20,13:PRINT" * * * MT9500 has no data * * *"
28030 REM       MT9500 self-exited mode. No SRQ enabled so do not wait.
28060   FOR I= 1 TO 2000:NEXT I  ' time delay for message to be read.
28090   GOTO 21910        'back to main menu
28120 REM
28150 REM     Receive 8 channels of data.
28180 REM
28210   FOR I=1 TO 8
28240     V%=&H80
28270     CALL IBEOS(GPIB0%,V%)
28300     CMD$=CHR$(UNT%)+CHR$(UNL%)+CHR$(UNIT%+&H40)+CHR$(ATLISTEN%)
28330     CALL IBCMD(GPIB0%,CMD$)
28360     IF IBSTA%<0 THEN 38470
28390     LOCATE 21,13:PRINT"transfer file # ",I
28420     CALL IBRDF(GPIB0%,MTFILE$(I))
28450     IF IBSTA%<0 THEN 38470
28480     V%=&H40D
28510     CALL IBEOS(GPIB0%,V%)
28540     GOSUB 36220       'get checksum but don't use currently.
28570     WRT$=CHR$(&H11):GOSUB 38800
28600   NEXT
28630   GOSUB 39310       'wait for mode complete.
28660   GOTO 21910         'back to menu.
28690 REM   SUBROUTINE FOR FORMAT TYPE OF DATA.
28720   LOCATE  10,13:PRINT"enter 1 for min/max OR 2 for average"
28750   M$=INKEY$:IF M$="" THEN 28750
28780   IF M$="1" OR M$="2" THEN 28810 ELSE 28720
28810   FORMAT$=M$: RETURN
28840   DISK$=INKEY$:IF DISK$="" THEN 28840
28870   IF DISK$="A" OR DISK$="B" OR DISK$="C" OR DISK$="D" THEN 28930
28900   GOTO 28840
28930   MTFILE$(1)=DISK$+":"+"MTDATA1.DAT"
28960   MTFILE$(2)=DISK$+":"+"MTDATA2.DAT"
28990   MTFILE$(3)=DISK$+":"+"MTDATA3.DAT"
29020   MTFILE$(4)=DISK$+":"+"MTDATA4.DAT"
29050   MTFILE$(5)=DISK$+":"+"MTDATA5.DAT"
29080   MTFILE$(6)=DISK$+":"+"MTDATA6.DAT"
29110   MTFILE$(7)=DISK$+":"+"MTDATA7.DAT"
29140   MTFILE$(8)=DISK$+":"+"MTDATA8.DAT":RETURN
29170 REM
29200 REM    --- Here to send data from COMPUTER to MT9500.
29230 REM
29260   CLS:LOCATE 3,13:PRINT"TRANSFER FROM DISK TO MT9500"
29290   LOCATE 5,13:PRINT"window size of file must be ",+WND$" ksamp"
29320   LOCATE 6,13:PRINT"window size can be changed with main menu"
29350   LOCATE 8,13:PRINT"data must be on files MTDATA1.DAT THRU MTDATA8.DAT"
29380   LOCATE 9,13:PRINT"enter drive (A,B,C,D): "
29410   GOSUB 28840         'setup filenames
29440   GOSUB 28720         'inquire which format
29470   LOCATE 14,13:PRINT"enter X to abort - any other key starts transfer"
29500   M$=INKEY$:IF M$="" THEN GOTO 29500
29530   IF M$="X" OR M$="x" THEN 21910
29560    V%=12:CALL IBTMO (GPIB0%,V%)
29590     SMASK%=0:GOSUB 37150
29620   WRT$=CHR$(&H1B)+"V"+FORMAT$:GOSUB 38800
29650  WRT$="8":GOSUB 38800    'tell MT9500 that 8 channels of data coming to it.
29680  WRT$=WND$:GOSUB 38800   'then how many ksamples / channel to accept.
```

```
29710  FOR I=1 TO 8
29740    LOCATE 23,27:PRINT"  file #";I;" being transferred"
29770    CMD$=CHR$(UNIT%+&H20)+CHR$(UNT%)+CHR$(ATTALK%)
29800    CALL IBCMD (GPIB0%,CMD$)
29830    IF IBSTA% < 0  THEN 38470
29860    V%=0:CALL IBEOT(GPIB0%,V%)  'disable EOI till full chnl sent.
29890    IF IBSTA% < 0 THEN 38470
29920    CALL IBWRTF(GPIB0%,MTFILE$(I))
29950    IF IBSTA% < 0 THEN 38470
29980    V%=1:CALL IBEOT(GPIB0%,V%)  'enable EOI and send dummy byte.
30010    IF IBSTA% < 0 THEN 38470
30040    WRT$=CHR$(&H0):GOSUB 38800  'send null byte with EOI
30070    GOSUB 36220                 'get checksum.
30100    IF I = 8 THEN 30160
30130    WRT$=CHR$(&H11):GOSUB 38800:GOTO 30190
30160    WRT$=CHR$(&H18):GOSUB 38800
30190    LOCATE 23,1:PRINT STRING$(79," ");
30220  NEXT I
30250  GOTO 26140   'goto playback menu for recording data
30280 REM
30310 REM  ------------------------------
30340 REM       DATA LOGGER MODE
30370 REM  ------------------------------
30400 REM
30430 REM   Test for option and alert host if not installed.
30460 REM
30490    IF DL%=1 THEN 30640       'data logger option installed?
30520    CLS:LOCATE 8,20:PRINT"DL-95 OPTION not installed"
30550    FOR I=1 TO 3000:NEXT     'time delay for message on screen.
30580    GOTO 5410                'back to main menu.
30610 REM
30640 REM   Change channel order to 1-8 (default values). Use
30670 REM   Selected Device clear for quick change....all others will also
30700 REM   be defaulted.
30730 REM
30760    CMD$=CHR$(ATTALK%)+CHR$(UNIT% + &H20)+CHR$(SDC%)+CHR$(UNT%)+CHR$(UNL%)
30790    CALL IBCMD(GPIB0%,CMD$)
30820 REM
30850 REM  Now allow SRQ's on MODE COMPLETE or INTERLOCK.
30880 REM
30910    SMASK%=&H5:GOSUB 37150    'change mask byte in MT9500.
30940 REM
30970 REM   Enter the selected unit into DATA LOGGER mode.
31000 REM
31030    WRT$=CHR$(&H1B)+"T":GOSUB 38770
31060 REM
31090 REM   Display menu for simple menu for DATA LOGGER operation.
31120 REM
31150    CLS:LOCATE 8,15:PRINT"1.   HALT/RUN MT9500 logging data."
31180    LOCATE 10,15:PRINT"2.   Exit DATA LOGGER operation."
31210    LOCATE 13,20:PRINT"   Enter choice: ";
31240 REM
31270    V%=1:CALL IBTMO(GPIB0%,V%)   'wait only 10 us.
31300    MASK%=&H5100                 'wait for TMO or SRQ.
31330    CALL IBWAIT(GPIB0%,MASK%)
31360    IF (IBSTA% AND &H1000) THEN 31390 ELSE 31450  'if SRQ...serial poll
31390    GOSUB 39940:GOTO 31150    'inform operator of INTERLOCK
31420 REM
31450    M$=INKEY$:IF M$="" THEN 31270   'if no key hit... loop.
31480    IF M$="2" THEN 31630
31510    IF M$ <> "1" THEN 31450
31540 REM
31570    WRT$=CHR$(&H13):GOSUB 38770   'send start command
31600    GOTO 31150     'next choice.
31630 REM
31660 REM  Here to exit data logger mode of operation.
```

```
31690 REM
31720    WRT$=CHR$(&H18):GOSUB 38770      'send EXIT command.
31750 REM
31780 REM   Now wait for service request....then poll for MODE COMPLETE.
31810 REM
31840    V%=13:CALL IBTMO(GPIB0%,V%)    '3 seconds plenty
31870    MASK%=&H5100                    'wait for SRQ or timeout
31900    CALL IBWAIT (GPIB0%,MASK%)
31930    IF (IBSTA% AND &HC000) <> 0 THEN 38470
31960    CMD$=CHR$(UNL%)+CHR$(SPE%)+CHR$(UNIT% + &H40)+CHR$(ATLISTEN%)
31990    CALL IBCMD (GPIB0%,CMD$)
32020    IF IBSTA% < 0 THEN 38470
32050    RD$=SPACE$(1):CALL IBRD(GPIB0%,RD$)
32080    IF IBSTA% < 0 THEN 38470
32110    IF (ASC(RD$) AND &H44) = &H44 THEN 32170
32140    GOTO 40870
32170    CMD$=CHR$(UNT%)+CHR$(ATTALK%)+CHR$(SPD%)+CHR$(UNT%)+CHR$(UNL%)
32200    CALL IBCMD(GPIB0%,CMD$)
32230    GOTO 5410        'back to main menu
32260 REM   ------------------------------------
32290 REM     DIGITAL DATA RECORDER MODES
32320 REM   ------------------------------------
32350   IF DI%=1 THEN 32440
32380   CLS:LOCATE 3,20:PRINT"Option not installed":FOR I=1 TO 3000:NEXT
32410   GOTO 5410
32440 REM   Demonstrate the SYNCHRONIZED MODE.
32470 REM
32500    SMASK%=&H5:GOSUB 37150    'allow MODE COMPLETE & INTERLOCK SRQ's
32530    WRT$=CHR$(&H1B)+"G"+"1":GOSUB 38770   'enter MT9500 into mode.
32560    CLS:LOCATE 3,16:PRINT"MT9500 DIGITAL DATA CONTROL MENU"
32590    LOCATE 4,16:PRINT"--------------------------------"
32620    LOCATE 8,9:PRINT"(ST)  Start / Stop"
32650    LOCATE 9,9:PRINT"(SC)  System Log channel control"
32680    LOCATE 10,9:PRINT"(EX)  Abort (EXIT) operation"
32710    LOCATE 18,20:PRINT"Enter a Command";
32740    LOCATE 18,36:PRINT"     ";
32770 REM   While waiting for choice monitor MT9500 paper/door situation.
32800    V%=1:CALL IBTMO(GPIB0%,V%)
32830    MASK% = &H5100
32860    CALL IBWAIT(GPIB0%,MASK%)
32890    IF (IBSTA% AND &H1000) THEN 32920 ELSE 32980
32920    GOSUB 39940:GOTO 32560       'do serial poll and inform operator.
32950 REM
32980    A$=INKEY$:IF A$="" THEN 32800
33010    IF (A$)"A" AND A$<="Z") OR (A$)="a" AND A$<+"z")THEN 33070
33040    PRINT CHR$(&H7);:GOTO 32740
33070    LOCATE 18,37:PRINT"'";A$
33100    B$=INKEY$:IF B$="" THEN 33100
33130    IF (B$)="a" AND B$<="z") OR (B$)="A" AND B$<="Z") THEN 33160
33160    LOCATE 18,38:PRINT"'";
33190    A$=A$+B$
33220    IF A$="ST" OR A$="st" THEN 33340
33250    IF A$="sc" OR A$="SC" THEN GOSUB 34450
33280    IF A$="EX" OR A$="ex" THEN 34840
33310    GOTO 32560
33340 REM
33370 REM    Start sending data to recorder.
33400 REM
33430 REM   Set timeout to be 1 second for general data packet transfer.
33460 REM
33490    V%=13:CALL IBTMO (GPIB0%,V%)
33520 REM
33550    CLS:LOCATE 6,14:PRINT"Press any key to stop recording...."
33580    D$="0"
33610    IF START$="0" THEN START$="1" ELSE START$="0"
33640    M$=INKEY$:IF M$="" THEN 33700
33670    START$="0":GOTO 32560
33700    FOR I=1 TO 250
33730    WRT$="D"+CHR$(&H0)
33760    M$=INKEY$:IF M$="" THEN 33790 ELSE 33670
33790        FOR J=1 TO 4
33820        WRT$=WRT$+CHR$(I)+CHR$(&H0)+CHR$(I)+CHR$(&H0)
33850        NEXT J
33880    GOSUB 38770
33910    IF D$="0" THEN 34000
33940      CLS:LOCATE 6,14:PRINT"Press any key to stop recording...."
33970      D$="0"
34000    NEXT I
34030    WRT$="M"+CHR$(&HFF)+CHR$(&H0)
34060      GOSUB 38770
34090      FOR I= 250 TO 1 STEP -1
34120      WRT$="D"+CHR$(&HFF)
34150      M$=INKEY$:IF M$="" THEN 34180 ELSE 33670
34180      FOR J=1 TO 4
34210      WRT$=WRT$+CHR$(I)+CHR$(&H0)+CHR$(I)+CHR$(&H0)
34240      NEXT J
34270      GOSUB 38770
34300      IF D$="0" THEN 34390
34330      CLS:LOCATE 6,14:PRINT"Press any key to stop recording...."
34360      D$="0"
34390      NEXT I
34420      GOTO 33640
34450 REM
34480 REM    Here to control system log channel.
34510 REM
34540     CLS:LOCATE 3,20:PRINT"SYSTEM LOG CHANNEL CONTROL"
34570     LOCATE 4,20:PRINT"-------------------------"
34600     LOCATE 6,20:PRINT"1.   System log channel printing OFF."
34630     LOCATE 7,20:PRINT"2.   System log channel printing ON."
34660     A$=INKEY$:IF A$="" THEN 34660
34690     IF A$="1" THEN 34780
34720     IF A$ <> "2" THEN 34540
34750     WRT$="C"+CHR$(&H3)+"+":GOSUB 38770:RETURN
34780     WRT$="C"+CHR$(&H3)+"-":GOSUB 38770:RETURN
34810 REM
34840 REM    Here to exit operation.
34870 REM
34900     WRT$="C"+CHR$(&H18):GOSUB 38770
34930 REM    Await SRQ for mode complete.
34960 REM
34990     GOSUB 39310
35020     GOTO 5410    'back to main menu.
35050 REM
35080 REM     Rotated printing mode.
35081 REM
35082    CLS:LOCATE 8,18:PRINT"MT9500 ROTATED PRINTING MODE"
35083    LOCATE 9,18:PRINT"--------------------------"
35084    LOCATE 13,6:PRINT"MT9500 is receiving data from computer...wait"
35110    V%=14:CALL IBTMO (GPIB0%,V%)       'select long timeout.
35140    SMASK%=&H0:GOSUB 37150             'disable any service requests
35170    WRT$=CHR$(&H1B)+"B":GOSUB 38800    'enter MT9500 into mode.
35198    WRT$=CHR$(&H9)+CHR$(&H9):GOSUB 38800
35199    FOR I= 1 TO 8
35200      WRT$=CHR$(&HA)+CHR$(&HA)+CHR$(&HA):GOSUB 38800   'send a few column e
35201 REM   Send the rows of information.
35204   WRT$="CHANNEL #"+HEX$(I)+"  LEFT WING FLAP #023   DELTA TEST"+CHR$(&HD)+
35205   WRT$="DATE: 01-01-88    TIME:  12:30 pm    SITE:  Somewhere, USA"+CHR$(&
35206   WRT$="TEST RECORD # 1023-12     OPERATOR:  KHA #5067-1"+CHR$(&HD)+CHR$(&
35207   WRT$="FAILURES: 00     WARNINGS: 01     "+CHR$(&HD)+CHR$(&HA)+CHR$(&HA):G
35208   WRT$=""+CHR$(&HD)+CHR$(&HA)+CHR$(&HA):GOSUB 38800
35210   WRT$=""+CHR$(&HD)+CHR$(&HA)+CHR$(&HA):GOSUB 38800
35230   NEXT I
```

```
35232     LOCATE 15,6:PRINT"MT9500 should be printing data...."
35260     WRT$=CHR$(&HC):GOSUB 38800        'print the buffer.
35261 REM
35290     WRT$=CHR$(&HB):GOSUB 38800        'exit mode.
35320     GOTO 5410                         'back to main menu.
35350 REM
35380 REM   --  - ----- - -- ------  ---------
35410 REM   Subroutine to get MT9500 time.
35440 REM   ---------------------------------
35470     T$=SPACE$(20)
35500     CMD$=CHR$(UNT%)+CHR$(UNL%)+CHR$(UNIT% + &H40)+CHR$(ATLISTEN%)
35530     CALL IBCMD (GPIB0%,CMD$)
35560     IF IBSTA% < 0 THEN 38500
35590     CALL IBRD (GPIB0%,T$)
35620     IF IBSTA% < 0 THEN 38500
35650     CMD$=CHR$(UNT%)+CHR$(UNL%)
35680     CALL IBCMD (GPIB0%,CMD$)
35710     IF IBSTA%<0 THEN 38500
35740     RETURN
35770 REM   -----  ----------- ---------------
35800 REM   Subroutine to get date from MT9500.
35830 REM   ---------------------------------
35860 REM
35890     D$=SPACE$(20)
35920     CMD$=CHR$(UNT%)+CHR$(UNL%)+CHR$(UNIT% + &H40)+CHR$(ATLISTEN%)
35950     CALL IBCMD (GPIB0%,CMD$)
35980     IF IBSTA% < 0 THEN 38500
36010     CALL IBRD (GPIB0%,D$)
36040     IF IBSTA% < 0 THEN 38500
36070     CMD$=CHR$(UNT%)+CHR$(UNL%)
36100     CALL IBCMD (GPIB0%,CMD$)
36130     IF IBSTA% < 0 THEN 38500
36160     RETURN
36190 REM   ------ ------------------------------
36220 REM     SUBROUTINE to get byte from MT9500.
36250 REM   ------------------------------------
36280     A$=SPACE$(1)
36310     CMD$=CHR$(UNT%)+CHR$(UNL%)+CHR$(UNIT% + &H40)+CHR$(ATLISTEN%)
36340     CALL IBCMD (GPIB0%,CMD$)
36370     IF IBSTA% < 0 THEN 38500
36400     CALL IBRD (GPIB0%,A$)
36430     IF IBSTA% < 0 THEN 38500
36460     CMD$=CHR$(UNT%)+CHR$(UNL%)
36490     CALL IBCMD (GPIB0%,CMD$)
36520     IF IBSTA% < 0 THEN 38500
36550     RETURN
36580 REM  ------------------------------------------
36610 REM    Select another MT9500 routine.
36640 REM  ------------------------------------------
36670 REM
36700     CLS:LOCATE 4,6
36730     PRINT"Address of current MT9500 being controlled: ";UNIT%;
36760     IF (UNIT% >=9) THEN 36820
36790     LOCATE 4,50:PRINT "0"
36820     LOCATE 5,6:PRINT"Enter address of new MT9500 to be controlled: ";
36850     A$=SPACE$(2):LINE INPUT A$
36880     IF LEN(A$)>2 THEN 36580
36910     IF LEN(A$)=0 GOTO 36970
36940     IF (VAL(A$)>=1 AND VAL(A$)<=NUMSC%) THEN 36970 ELSE 36580
36970     CMD$=CHR$(UNT%)+CHR$(UNL%)+CHR$(ATTALK%) 'address computer to talk.
37000     CALL IBCMD (GPIB0%,CMD$):V%=13:CALL IBTMO (GPIB0%,V%)
37030     CMD$=CHR$(DCL%):CALL IBCMD (GPIB0%,CMD$)
37060     UNIT%=VAL(A$):GOTO 5200
37090     RETURN
37120 REM
37150 REM    ---------------------------------------------------
```

```
37180 REM     MODIFY SERVICE REQUEST MASK BYTE IN SPECIFIC UNIT.
37210 REM         UNIT% =  unit to have mask byte changed.
37240 REM         SMASK% = value of mask byte to send.
37270 REM     ---------------------------------------------------
37300 REM
37330     WRT$=CHR$(&H1B)+"Z":GOSUB 38770        'enter setup mode.
37360     WRT$=CHR$(&H14)+CHR$(SMASK%)+CHR$(13):GOSUB 38770  'send mask command
37390     WRT$=CHR$(&H1B):GOSUB 38770   'send exit setup mode command.
37420 REM
37450 REM  If mask sent enabled MODE COMPLETE SRQ...then wait for it.
37480 REM
37510     IF (SMASK% AND &H4) THEN 37540 ELSE 38290   'if not enable...skip SRQ.
37540 REM
37570 REM   Wait for SRQ meaning MT9500 has completed the mode and at IDLE.
37600     V%=13:CALL IBTMO (GPIB0%,V%)     '3 second timeout
37630     MASK%=&H5100     'SRQ or timeout (allow asynchronous completion)
37660     CALL IBWAIT (GPIB0%,MASK%)
37690 REM
37720 REM     Test for SETUP mode complete or timeout.
37750 REM
37780     IF (IBSTA% AND &HC000) <> 0 THEN 38470
37810 REM
37840 REM   Since not timeout or error then must be SRQ.
37870 REM
37900     CMD$=CHR$(UNL%)+CHR$(SPE%)+CHR$(UNIT% + &H40)+CHR$(ATLISTEN%)
37930     CALL IBCMD (GPIB0%,CMD$)
37960     IF IBSTA% < 0 THEN 38470
37990 REM   Now read status byte.
38020 REM
38050     RD$=SPACE$(1):CALL IBRD(GPIB0%,RD$)
38080     IF IBSTA% < 0 THEN 38470
38110     IF (ASC(RD$) <> &H44) THEN 40870   'IF NOT SRQ ON MODE COMPLETE...ERR.
38140 REM
38170 REM   Complete serial poll.
38200 REM
38230     CMD$=CHR$(UNT%)+CHR$(ATTALK%)+CHR$(SPD%)+CHR$(UNT%)+CHR$(UNL%)
38260     CALL IBCMD(GPIB0%,CMD$)
38290     RETURN
38320 REM     ---------------------------------------------------
38350 REM      Error routine:   For handling IBFIND GPIB error.
38380 REM     ---------------------------------------------------
38410 REM
38440     CLS:LOCATE 12,1:PRINT"*** Error in IBFIND call ***";:STOP
38470 REM
38500 REM     ---------------------------------------------------
38530 REM      Error routine:   For handling IBSTA status error.
38560 REM     ---------------------------------------------------
38590 REM
38620     LOCATE 12,1:PRINT"*** Error in status ***"
38650     LOCATE 14,1:PRINT"IBSTA% = ";HEX$(IBSTA%)
38680     LOCATE 15,1:PRINT"IBERR% = ";IBERR%
38710     LOCATE 16,1:PRINT"IBCNT% = ";IBCNT%
38740     CALL IBSIC(GPIB0%):STOP
38770 REM
38800 REM ------------------------------------------------
38830 REM    SUBROUTINE:  To send command to a recorder (unit)
38860 REM ------------------------------------------------
38890 REM
38920 REM    Address computer to talk and device (unit) to listen.
38950 REM
38980      CMD$=CHR$(UNIT% + &H20)+CHR$(ATTALK%)
39010      CALL IBCMD (GPIB0%,CMD$)
39040      IF (IBSTA% AND &H1000) THEN GOSUB 40090:D$="1":GOTO 38980
39070      IF IBSTA% < 0 THEN 38470
39100      CALL IBWRT (GPIB0%,WRT$)
39130      IF (IBSTA% AND &H1000) THEN GOSUB 40090:D$="1":GOTO 38980
```

```
39160    IF IBSTA% < 0 THEN 38470
39190    CMD$=CHR$(UNT%)
39220    CALL IBCMD(GPIB0%,CMD$)
39250    IF IBSTA%<0 THEN 38470
39280  RETURN
39310  REM  ------------------------------------------
39340  REM     SERIAL POLL ROUTINE (for MODE COMPLETE SRQ)
39370  REM
39400  REM     This routine waits for the SRQ from the MT9500
39430  REM     indicating mode complete. Control returns to main
39460  REM     program after successful serial poll.
39490  REM  ------------------------------------------
39520  REM
39550          V%=11:CALL IBTMO(GPIB0%,V%)          'timeout of 3 sec.
39580          MASK%=&H5100                         'await SRQ or timeout
39610          CALL IBWAIT(GPIB0%,MASK%)
39640          IF (IBSTA% AND &H5100) = &H100 THEN 39580
39670          IF (IBSTA% AND &HC000) <> 0 THEN GOSUB 38470
39700          CMD$=CHR$(UNL%)+CHR$(SPE%)+CHR$(UNIT%+&H40)+CHR$(ATLISTEN%)
39730          CALL IBCMD (GPIB0%,CMD$)
39760          IF IBSTA% < 0 THEN 38470
39790          RD$=SPACE$(1):CALL IBRD(GPIB0%,RD$)
39820          IF IBSTA%<0 THEN 38470
39850          CMD$=CHR$(UNT%)+CHR$(ATTALK%)+CHR$(SPD%)+CHR$(UNT%)+CHR$(UNL%)
39880          CALL IBCMD(GPIB0%,CMD$)
39910          RETURN
39940  REM  ------------------------------------------
39970  REM     INTERLOCK SITUATION ON A MT9500
40000  REM  ------------------------------------------
40030  REM
40060  REM     Inform operator of problem with an MT9500 (paper out or door)
40090  REM
40120  REM
40150          CLS:LOCATE 8,17:PRINT"* *  INTERLOCK PROBLEM WITH MT9500 * *"
40180          LOCATE ,11,10
40210          PRINT"MT9500 is out-of-paper OR door open....CORRECT THE PROBLEM !"
40240          CMD$=CHR$(UNL%)+CHR$(SPE%)+CHR$(UNIT% + &H40)+CHR$(ATLISTEN%)
40270          CALL IBCMD (GPIB0%,CMD$)
40300          IF IBSTA% < 0 THEN 38470
40330          RD$=SPACE$(1):CALL IBRD(GPIB0%,RD$)
40360          IF IBSTA%<0 THEN 38470
40390          CMD$=CHR$(UNT%)+CHR$(ATTALK%)+CHR$(SPD%)+CHR$(UNT%)+CHR$(UNL%)
40420          CALL IBCMD (GPIB0%,CMD$)
40450  REM
40480  REM     Poll every .1 sec until no more SRQ (interlock).
40510  REM
40540          V%=9:CALL IBTMO(GPIB0%,V%)
40570          MASK%=&H5000:CALL IBWAIT (GPIB0%,MASK%)  'wait for TMO or SRQ
40600  REM
40630          IF (IBSTA% AND &H4000) THEN 40930 'if TMO...exit
40660          IF (IBSTA% AND &H1000) THEN 40690 ELSE 40570
40690          CMD$=CHR$(UNL%)+CHR$(SPE%)+CHR$(UNIT%+&H40)+CHR$(ATLISTEN%)
40720          CALL IBCMD (GPIB0%,CMD$)                 'do serial poll
40750          IF IBSTA% < 0 THEN 38470
40780          RD$=SPACE$(1):CALL IBRD(GPIB0%,RD$)
40810          IF IBSTA%< 0 THEN 38470
40840          CMD$=CHR$(UNT%)+CHR$(ATTALK%)+CHR$(SPD%)+CHR$(UNT%)+CHR$(UNL%)
40870          CALL IBCMD (GPIB0%,CMD$)
40900          GOTO 40570                           'wait for no more interlock
40930          RETURN
```

Acronyms and Abbreviations

Acronyms and Abbreviations

<A>*	Annotation
AC	Alternating Current
<ACQUIS>*	Acquisition
A/D	Analog to Digital
AGC	Automatic Gain Control
AN-95	Anvil Travel Case
AP-95	Alphanumeric Printing option
ASC	Astro-Med Signal Conditioner
ASCII	American Standard Code for Information Interchange
AUX	Auxiliary
BCD	Binary Coded Decimal
°C	Degrees centigrade
Cal	Calibration
<CAL LOG>*	Calibrate Datalogger mode
<CH>*	Channel
<CHNLS>*	Channels
<CON SS T>*	Continuous Snapshot (Triggered) mode
<CON SS U>*	Continuous Snapshot (Untriggered) mode
CPU	Central Processing Unit
<DATA LOG>*	Datalogger Mode
dB	Decibels
DC-95	Data Capture option
<DEF>*	Define
deg	Degree
DI	Digital Interface
DIP	Dual In-line Package
DL-95	Datalogger option
<E>*	Event Marker
<EVT>*	Event
<EXP>*	Exponent
<EXT>*	External
<EX>*	Expand (data expansion factor)
F	function
°F	Degrees Fahrenheit
Formfeed	Advance chart paper to next index mark

*MT-9500 front-panel LED display

ft	feet
GND	Ground
HELP	Help mode generates Condensed Operations Manual
Hz	Hertz
I	Inverted signal
IC	Integrated Circuit
ID	Identification
IEEE	Institute of Electrical and Electronics Engineers
<INTRLOCK>*	Interlock error
I/O	Input/Output
IRIG	Inter-Range Instrumentation Group
k	Thousand
KB-220	Keyboard accessory
kHz	kilohertz
KOhm	KilOhms
KSMP	Kilosample
LA-95	Light Emitting Diode Array Accessory
LED	Light Emitting Diode
<LS>*	Left Side
m	Meter
megHz	MegaHertz
MIN/MAX	Minimum/Maximum
<M/L>*	Minutes per line
mm	millimeters
mm/dd/yy	month/day/year
MM/HR	Millimeters per hour
MM/MIN	Millimeters per minute
MM/SEC or mm/s	Millimeters per second
MS/L	Milliseconds per line
MT	Multi-Task
mV	Microvolts
MΩ	MegOhms
<N>*	No (no signal conditioner reporting) or Non-inverted signal
NASA	National Aeronautics and Space Administration
NiCad	Nickel Cadmium

*MT-9500 front-panel LED display

NVRAM	Nonvolatile Random Access Memory
OM-95	Overlap Mode option
<OVLAP RT>*	Overlap Real-Time Recording Mode
<PLBK>*	Playback
P/N	Part Number
PROM	Programmable Read Only Memory
PT-95	Paper Take-Up Drawer Accessory
RAM	Random Access Memory
RC-95	Roll Around Cart Accessory
RMS	Root Mean Square
<RS>*	Right Side
<RT>*	Real-Time
RW-95	Rewinder Accessory
S	Switch
<S1>*	Speed 1
<S2>*	Speed 2
<SCN>*	Software Configuration Number
<SIG COND>*	Signal Conditioner
<SING SS>*	Single Snapshot
<S/L>*	Seconds per line
<SP>*	Stop Time
SPD	Speed
<ST>*	Start Time
<T1>*	Time 1
<T2>*	Time 2
TOF	Top of Form
<TR CH>*	Trigger Channel
<TRIG>*	Trigger
TTL	Transistor to Transistor Logic level
<T/W>*	Trigger to Window relationship
UNCAL	Uncalibrated
V	Volts
µV	microVolts
VAC	Volts Alternating Current
VDC	Volts Direct Current
WT-95	Writing Table Accessory
X	Represents any given quantity
<Y>*	Yes (signal conditioner reporting)

*MT-9500 front-panel LED display

Index

A

<A>* 3-46
ABC key QG-8, 3-4, 3-5, 3-42
accessories 1-5, 1-11
AC power connections 2-2, 3-4, 3-14, 3-16
acquire single snapshot (Mode 5) 1-2, 1-4, 3-7, 3-90, 3-99 - 3-101
<ACQUIS>* QG-13, 3-100, 3-104, 3-106, 3-107
acquisition information, define 3-8, 3-91 - 3-93
acquisition setup 3-91 - 3-93
adjustment, trimmer potentiometer 3-22 - 3-24
A/D resolution QG-2, 1-1, 1-7, 4-11, 4-13, 4-18, 4-26
A key QG-8, 3-4, 3-5, 3-42
analog input 1-7, 2-5, 3-16
analog input channel diagram 4-11
analog input receptacle 3-14, 3-16, 3-21
analog section, real-time recording 4-11
analog to digital (A/D) conversion board 4-2 - 4-4, 4-13
AN-95 accessory 1-11
annotation, interchannel buffers QG-9 - QG-11, 1-8, 3-45, 3-47, 3-49
annotation entry setup 3-47 - 3-51
annotation/event marker, definition 3-8, 3-45 - 3-47
annotation, time 4-19
AP-95 option 1-10, 3-45, 3-47, 3-52
ASCII codes, character equivalents 3-49
see also: editing interchannel buffers
ASC series signal conditioners 1-11, appendix A
auxiliary AC power receptacle 3-16

B

battery circuit diagram 4-20
battery, NiCad 3-37, 3-38, 4-19, 4-20
B key QG-8, 3-4, 3-5, 3-43
BNC connectors, rear panel QG-2, 2-5, 3-14 - 3-19, 3-21, 3-22, 3-72
see also EVENT, RUN, TRIG, CH1 through CH8
<BUFFER>* QG-9, 3-47
buffers, editing interchannel QG-9 - QG-11, 3-45, 3-47, 3-49, 3-51
buffer spaces, interchannel 1-8, 3-47, 3-48

**Throughout this index, entries appearing between the symbols, "< >," indicate an LED display readout.*

C

C-950 card cage 1-12
C-950R card cage 1-12
Cal/Uncal/Gnd control 3-9, 3-10, 3-67, 3-72, 3-81, 4-12
<CAL LOG>* 3-84
CAL LOG setup
    seee Datalogger setup
calendar, setting recorder's date 3-36, 3-37
calibration and test diskette 1-6, 2-1, appendix D
calibration of datalogger 4-25
calibration of grid 3-9, 3-10, 3-67, 3-72, 4-12
capacity, system memory 4-23
case, travel (AN-95) 1-16
cases, recorder 2-6 - 2-17
<CENTER>* 3-96
center trigger 3-96, 3-97, 3-101, 4-25
central processing unit (CPU) board 4-1, 4-2
CH1 through CH8 BNC connectors 3-14, 3-15, 3-21
channel grid format 1-7, 3-40, 3-41, 3-54, 3-62, 3-63, 3-68, 3-69
channel order setup 3-8, 3-53, 3-54
channels, number of 1-2, 1-7, 3-62, 3-63
channel tags, datalogger 3-88
character equivalents of ASC II codes 3-49
chart drive 4-7
chart paper, loading roll thermal paper 3-29
chart paper, loading Z-fold thermal paper 3-25
chart paper speed QG-8, QG-9, 1-2, 1-9, 3-5, 3-40 - 3-43, 4-7, 4-9
<CH. ORDER>* 3-53 - 3-55
C key QG-8, 3-4, 3-5, 3-43
clock, real-time 4-19, 4-20
clock, setting recorder's time QG-7, 3-36
codes, external time 4-21
    see also IRIG options
computer interfaces 1-2, 1-8, 3-14, 3-20, 3-21
    see also IEEE-488 port and RS-232 port
condensed operations manual QG-2 - QG-4, 3-7, 3-82
configurations, recorder 1-4, 1-6
<CON SS T>* 3-106
<CON SS U> QG-13, 3-6, 3-104
continuous triggered snapshot (Mode 3) 1-4, 3-7, 3-90, 3-105 - 3-107

C (continued)

continuous untriggered snapshot (Mode 2) 1-4, 3-7, 3-90, 3-103 - 3-105
controls and indicators, front panel 1-9, 3-1 - 3-13
CPU board 4-1, 4-2

D

data acquisition 4-3
data acquisition, real-time analog recording 4-13
data-capture, factory defaults 3-92
data capture and playback features, general 1-3, 3-1, 4-22
data capture/playback modes 3-90 - 3-107
    acquire single snapshot (Mode 5) 1-2, 1-4, 3-7, 3-99 - 3-101
    continuous snapshot (triggered) (Mode 3) 3-90, 3-105 - 3-107
    continuous snapshot (untriggered) (Mode 2) 3-90, 3-103 - 3-105
    playback single snapshot (Mode 6) 3-90, 3-101 - 3-103
data capture/playback operation 1-2 - 1-4, 3-1, 3-90 - 3-107
data-capture recording setups 3-91, 3-92
    acquisition setup 3-91 - 3-93
    playback setup 3-92, 3-94, 3-95
    trigger channel and location setup 3-95 - 3-97
    X and Y channel select setup 3-98, 3-99
data-entry keypad 3-1, 3-3 - 3-8
<DATA LOG>* 3-86
datalogger, calibration of 3-8, 3-82 - 3-89, 4-25
datalogger printout 3-88, 3-89
datalogger real-time recording (Mode 9) QG-6, QG-7, QG-12,
    1-8, 3-7, 3-38, 3-82 - 3-89
datalogger setup 3-84 - 3-86
data snapshots QG-11 - QG-13, 1-4, 3-91, 3-99 - 3-102
DATE key 3-3 - 3-5
date, setting recorder's calendar QG-7, 3-36, 3-37
date setup 3-39
DC-95 option 1-10, 3-90, 4-22
<DEF PLAYBACK>* QG-12, 3-94
<DEF SAVE>* QG-12, 3-91
<DEF TRIG>* QG-12, 3-96
DI-488-95 option 1-10
digital waveforms 1-2, 1-7
digititized data input 1-2, 1-7, 3-20

D (continued)

dimensions, recorder 1-6
DIP switch settings, IRIG 3-13, 3-17, 3-18
display, LED 3-1, 3-4, 3-10
direct thermal recording, principles of 4-5
diskette, test and calibration 1-16, 2-1, appendix D
DL-95 option 1-10, 3-82, 3-103
dot history 4-6
    see also energy control mechanisms
D-shell connectors, rear panel:
    ANALOG INPUT 3-13, 3-14, 3-16, 3-21
    IEEE-488 PORT 1-2, 1-16, 3-14, 3-15, 3-21
    LA-95 (AUX DISPLAY) 3-13, 3-14, 3-16
    SERIAL PORT (RS-232 interface) 1-2, 1-16, 3-14, 3-15, 3-20
    TALKING SIGNAL CONDITIONERS 3-13, 3-14, appendix A
    UTILITY PORT 3-12, 3-14, 3-15, 3-19
<DUAL SPD>* 3-74
dual-speed real-time recording (Mode 4) 1-2, 3-7, 3-38, 3-72 - 3-81
dual thermal printheads 1-1, 4-5, 4-6

E

<E>* 3-46
<EDIT CH>* 3-47, 3-52
editing interchannel buffers QG-9 - QG-11, 1-8, 3-45, 3-47, 3-49
eight channel real-time recording (Mode 0) 1-2, 3-7, 3-38, 3-62 - 3-67
<8-CHNLS>* 3-75, 3-94
<8 CH RT>* 3-44, 3-74, 3-86
electronic components, major 4-1
EM-95 option 1-10, 3-45
enclosures, rack 1-16
enclosures, recorder 2-6 - 2-17
<END>* 3-96
end trigger 3-96, 3-97, 3-101, 4-25
energy control mechanisms 4-6
ENTER key 3-2 - 3-4, 3-6
EP-95 option 1-10
<ERROR1>* 4-3
<ERROR2>* 4-3
<ERROR 5> * 2-5

E (continued)

error codes 2-4, 4-3
EVENT and ID pushbuttons 3-1, 3-2, 3-10, 3-11, 3-15, 3-80
EVENT BNC connector 3-14, 3-15, 3-19, 3-22, 3-67, 3-72, 3-81
event markers QG-5, 1-8, 3-10, 3-11, 3-19, 3-67, 3-72, 3-80, 3-81
    see also EVENT BNC connector
event or annotation setup 3-45 - 3-47
<EX BY 01>* 3-95
expanded playback 3-95
<EXP=0>* 3-85
exponent, playback setup 3-85, 3-95
external motor speed source 3-8
external time codes 4-21

F

F1 and F2 keys 3-2 - 3-4, 3-6
factory defaults, set 3-8
factory default real-time setups 3-41
fan vent 3-13, 3-14, 3-16
features, general data capture and playback 1-3
features, general real-time recording 1-2
features, standard recorder 1-5
formfeed, chart paper 1-2, 3-7
frequency response 1-2, 1-7, 4-15, 4-16
    worst-case diagram 4-16
front panel controls and indicators 1-9, 3-1 - 3-13
    data entry keypad 3-1 - 3-8
    EVENT and ID group 3-1, 3-2, 3-10, 3-11, 3-15, 3-80
    LED display 3-1, 3-2, 3-10
    power switch 3-1, 3-2, 3-13
    signal adjustment group 3-1, 3-2, 3-9, 3-10
    trigger defintion group 3-1, 3-2, 3-11 - 3-13
function commands 3-8
    annotation/event marker definition 3-8, 3-45 - 3-47
    define acquisition information 3-8, 3-91 - 3-93
    define channel order 3-8, 3-53, 3-54
    define playback information 3-8, 3-92, 3-94, 3-95
    define real-time motor speed source 3-8, 3-40, 3-41, 3-56, 3-57
    define signal conditioner report status 3-8, 3-52, 3-53

F (continued)

function commands (continued)
define signal polarity reversal 1-9, 3-8, 3-55, 3-56
define snapshot sample rate clock source 3-8, 3-40, 3-41, 3-60, 3-61
edit interchannel buffers QG-9 - QG-11, 1-8, 3-8, 3-45, 3-47, 3-49
enter timed operation 3-8, 3-43 - 3-45
grid printing on/off 3-8, 3-54, 3-55
set calibration for datalogger mode 3-8, 3-82 - 3-89
set communications type 3-8, 3-40, 3-41, 3-57 - 3-59
set factory defaults 3-8, 3-41, 3-60
set X and Y channel choices 3-8, 3-92, 3-98
trigger enable/disable 3-8, 3-97, 3-98
functional specifications 1-5, 1-6
fuse specifications 1-6, 2-3, 3-15

G

gain, altering 3-22 - 3-24
see also trimmer potentiometers
gain, factory set 3-10
GAIN control 3-1, 3-2, 3-9, 3-10, 3-14
general data capture and playback features 1-3
general real-time recording features 1-2
getting started 1-16
<GRID OFF>* 3-54
<GRID ON>* 3-54
grid, calibrated and uncalibrated 3-9, 3-10
grid, overlap QG-1, QG-6, QG-12, 1-8, 3-67 - 3-72
grid printing on/off setup 3-54, 3-55
grid, eight channel 1-8
grids 1-1

H

HALT key 3-4, 3-6
hardware supplied with recorder 2-1, 2-2
HELP mode QG-2 - QG-4, 1-2, 3-4, 3-7
highlights, recorder operation 1-1 - 1-4
host control operations manual 1-1, 4-26

I

<I>* 3-55
ID pushbutton 3-10, 3-59, 3-68, 3-71, 3-80
IEEE-488 port 1-2, 1-16, 3-14, 3-21
IEEE-488 port receptacle pin connections 3-21
immediate data snapshot 1-3, 1-7
index mark (TOF mark) 4-9
indicators and controls, front panel 1-9, 3-1 - 3-12
    data entry keypad 3-1 - 3-8
    EVENT and ID group 3-1, 3-2, 3-10, 3-11, 3-15
    LED display 3-1, 3-2, 3-10
    power switch 3-1, 3-2, 3-13
    signal adjustment group 3-1, 3-2, 3-9, 3-10
    trigger defintion group 3-1, 3-2, 3-11 - 3-13
input/output board 4-1, 4-2
input/output, rear panel connections 3-13 - 3-24
    ANALOG INPUT receptacle 3-14, 3-16, 3-17, 3-21
    AUXILIARY AC POWER receptacle 3-14, 3-16
    CH1 through CH8 BNC connectors 3-14, 3-15, 3-21
    EVENT BNC connector 3-14, 3-15, 3-19, 3-22, 3-67, 3-72, 3-81
    fan vent 3-13, 3-14, 3-16
    IEEE-488 PORT 1-2, 1-16, 3-14, 3-21
    IRIG INPUT BNC connector 3-14, 3-17, 3-18
    IRIG option DIP switches 3-14, 3-18
    LA-95 (AUX DISPLAY) receptacle 3-14, 3-16
    RUN BNC connector 3-14, 3-15, 3-19, 3-22, 3-67, 3-81
    SERIAL PORT receptacle 1-2, 1-16, 3-14, 3-15, 3-20
    TALKING SIGNAL CONDITIONER receptacle 3-14, 3-17
    TRIG BNC connector 3-12, 3-14, 3-15, 3-22, 3-67, 3-81, 3-100
    UTILITY PORT receptacle 3-12, 3-14, 3-19
installation 2-1
installation alternatives 2-5 - 2-21
insta-speeds 3-5, 3-42, 3-43
insta-speed setup QG-8, QG-9, 3-42, 3-43
integrated circuits (ICs) 4-4
interchannel buffers, editing QG-9 - QG-11, 1-8, 3-45, 3-47, 3-49
interlock 4-11
INTRLOCK error 2-4, 2-5, 3-29, 3-36

I (continued)

invert, signal polarity 3-55, 3-56
IRIG A, B, H 3-17, 3-18, 3-84, 4-21
IRIG DIP switch settings 3-18
IRIG INPUT BNC connector 3-14, 3-17, 3-18
IRIG options 1-8, 3-17
IRIG-95 option 1-10

K

KB-220 accessory QG-9, 1-11, 3-47
keypad, data-entry 3-3 - 3-8

L

LA-95 accessory 1-8, 1-11, 1-12
    installation of 2-19, 2-20
LA-95 (AUX DISPLAY) input 3-16
lamp, trigger 3-1, 3-2, 3-13
LED display 3-1, 3-2, 3-10
LEVEL control 3-11 - 3-13
line printing rate 3-87
line voltage requirements 1-6, 2-3, 3-15
loading roll thermal paper 3-29
loading Z-fold thermal paper 3-25
LS (left side, datalogger) 3-84, 3-85
<LS = 0200>* 3-84

M

markers, event QG-5, 1-8, 3-10, 3-11, 3-67, 3-72, 3-80, 3-81
    see also EVENT BNC
manual trigger 3-11, 3-12, 3-67, 3-71, 3-80, 3-100 - 3-102
master/slave, print engine 4-2, 4-3
memory, capacity of system 1-8, 4-23
memory type 1-8
min/max 4-13
<M/L>* 3-88

M (continued)

MM/HR key 3-4, 3-5, 3-75, 3-77, 3-78
MM/MIN key 3-4, 3-5, 3-75, 3-77, 3-78
MM/SEC key 3-4, 3-5, 3-75, 3-77, 3-78
MODE key 3-3, 3-6
modes, entering operational 3-38
modes of operation 1-7, 1-8, 3-7
Mode 0, eight channel real-time recording 1-2, 3-7, 3-38, 3-62 - 3-67
Mode 1, overlap real-time recording 3-7, 3-38, 3-67 - 3-72
Mode 2, continuous snapshot (untriggered) 3-90, 3-103 - 3-105
Mode 3, continuous snapshot (triggered) 3-90, 3-105 - 3-107
Mode 4, dual speed real-time recording 1-2, 3-7, 3-38, 3-72 - 3-81
Mode 5, acquire single snapshot 1-2, 1-4, 3-7, 3-90, 3-99 - 3-101
Mode 6, playback single snapshot 3-90, 3-101 - 3-103
Mode 7, formfeed 1-2, 4-9
Mode 8, Help QG-2 - QG-4, 3-82
Mode 9, datalogger real-time recording QG-6, QG-7, QG-12, 1-8, 3-7, 3-38, 3-82 - 3-89
motor speed source, define real-time 3-8, 3-40, 3-41, 3-56, 3-57
motor, stepper 4-7
<MS/L>* 3-88
MT-9500C 1-4
MT-9500/MT-8800 Host-Control Operations Manual 1-1, 1-7, 1-16, 3-20, 3-21
MT-9500 Maintenance and Service Manual 1-1
MT-9500 physical/functional specifications 1-5 - 1-9
MT-9500R 1-4

N

<N> 3-52, 3-55
NASA 36 time code 3-17, 3-18, 4-21
NiCad battery 3-37, 3-38, 4-19
    diagram of 4-20
<NUMERIC>* 3-94
numeric keys, data entry keypad 3-3, 3-4 - 3-8
numeric playout of data
    see all Datalogger entries

O

OG-95 option 1-10
OM-95 option QG-6, 1-10, 3-103
operation 3-1 - 3-107
operation, data capture/playback 3-90 - 3-107
operation, modes of 1-7, 1-8, 3-7
operation, real-time 1-2, 3-1, 3-38 - 3-89
operation, recorder highlights 1-1 - 1-4
operation, theory of 4-1
options 1-5, 1-10
<OVERLAP> 3-75, 3-94
overlap grid QG-1, QG-6, QG-12, 1-8, 3-67 - 3-72
overlap real-time recording 3-7, 3-38, 3-67 - 3-72, 3-94, 4-25
<OVLAP RT>* 3-6, 3-44, 3-87, 3-88

P

paper loading procedure, roll thermal 3-29 - 3-35
paper loading procedure, Z-fold thermal 3-25 - 3-29
paper, roll 1-1, 3-29 - 3-35
paper specifications 1-6
paper speeds QG-8, QG-9, 1-2, 1-9, 3-5, 3-40 - 3-43
paper take-up drawer (PT-200) 1-11, 1-15
    installation of 2-20, 2-21
paper, Z-fold QG-1, 1-1, 2-3, 3-25 - 3-29
physical specifications, recorder 1-5, 1-6
pin connections:
    analog input receptacle 3-14, 3-16, 3-17, 3-21
    IEEE-488 port receptacle 3-14, 3-21
    serial port receptacle 3-14, 3-20
    utility port receptacle 3-14, 3-19
<PLAYBACK>* 3-102, 3-104, 3-106, 3-107
playback , data capture 1-2 - 1-4, 3-1, 3-90 - 3-107, 4-25
playback information, define 3-8, 3-92, 3-94, 3-95
playback setup 3-94, 3-95
playback single snapshot 1-4, 3-7, 3-101 - 3-103
polarity, signal reverse setup 1-9, 3-55
positioning, real-time waveform trace 1-13, 3-9, 3-81
potentiometers, trimmer 3-22 - 3-24

P (continued)

power input receptacle 3-15
power requirements 1-6, 2-3, 3-15
power, supplying recorder with 2-2, 2-3
power switch 3-1, 3-2, 3-13
print engine 4-3
PROMS 4-4
printhead, thermal dual 1-1, 4-2, 4-5, 4-6
PT-200 accessory 1-11, 1-15, 2-20, 2-21

Q

Quick Guide QG-1 - QG-13

R

rack enclosures 1-16, 2-6 - 2-17
rack mount, recorder configuration 2-1, 2-5 - 2-17
rack slide hardware, installation of 2-5 - 2-17
RC-95 accessory 1-11, 1-15
real-time clock 4-19
real-time factory default setups 3-41
real-time motor speed source 3-8
real-time operation 1-2, 3-1, 3-38 - 3-89
real-time recording modes 3-38 - 3-89
- datalogger recording (Mode 9) QG-6, QG-7, QG-12, 1-8, 3-7, 3-38, 3-82 - 3-89
- dual speed recording (Mode 4) 1-2, 3-7, 3-38, 3-72 - 3-81
- eight-channel real-time recording (Mode 0) 1-2, 3-7, 3-38, 3-62 - 3-67
- overlap real-time recording (Mode 1) 3-7, 3-38, 3-67 - 3-72

real-time recording setups 3-39, 3-40
- annotation entry setup 3-40, 3-41, 3-47
- channel order setup 3-40, 3-4, 3-53
- communications type setup 3-8, 3-40, 3-41, 3-57 - 3-59
- date setup 3-36, 3-39, 3-40, 3-41
- event or annotation setup 3-40, 3-41, 3-45
- factory defaults setup 3-8, 3-41, 3-60
- grid printing on/off setup 3-40, 3-41, 3-54
- insta-speed setups 3-40 - 3-42

R (continued)

real-time recording setups 3-39, 3-40 (continued)
- motor speed source setup 3-8, 3-40, 3-41, 3-56, 3-57
- setup summary 3-56
- signal conditioner print status setup 3-40, 3-41, 3-52
- snapshot sample rate clock setup 3-8, 3-40, 3-41, 3-60, 3-61
- speed setup 3-40 - 3-42
- time setup 3-36, 3-39, 3-40, 3-41
- timed operation setup 3-40, 3-41, 3-43

real-time waveform trace, positioning of 1-13, 3-9, 3-81
rear panel input/output connections 3-13 - 3-24
- ANALOG INPUT receptacle 3-14, 3-16, 3-17, 3-21
- AUXILIARY AC POWER receptacle 3-14, 3-16
- CH1 through CH8 BNC connectors 3-14, 3-15, 3-21
- EVENT BNC connector 3-14, 3-15, 3-19, 3-22, 3-67, 3-72, 3-81
- fan vent 3-13, 3-14, 3-16
- IEEE-488 PORT 1-2, 1-16, 3-14, 3-21
- IRIG INPUT BNC connector 3-14, 3-17, 3-18
- IRIG option DIP switches 3-14, 3-18
- LA-95 (AUX DISPLAY) receptacle 3-14, 3-16
- RUN BNC connector 3-14, 3-15, 3-19, 3-22, 3-67, 3-81
- SERIAL PORT receptacle 1-2, 1-16, 3-14, 3-15, 3-20
- TALKING SIGNAL CONDITIONER receptacle 3-14, 3-17
- TRIG BNC connector 3-12, 3-14, 3-15, 3-22, 3-67, 3-81, 3-100
- UTILITY PORT receptacle 3-12, 3-14, 3-19

receipt, setup upon 2-1 - 2-5
recorder:
- without case 2-6
- in Astro-Med enclosure 2-6
- in customer furnished enclosure 2-8
- and rewinder without case 2-14
- and rewinder in Astro-Med enclosure 2-15
- and rewinder in customer-furnished enclosure 2-17

recorder configurations 1-4
recorder, hardware supplied with 2-1, 2-2
recorder operation, highlights 1-1
recorder self-test 4-3
recording method 1-6
recording settings, scrolling on front panel LED display 3-6, 3-48 - 3-51

R (continued)

recorder setup 3-25
recorder standard features 1-5
recording, direct thermal, principles of 4-5
remote start/stop 3-14, 3-19, 3-67, 3-81
    see also RUN BNC connector
resolution 1-1, 1-8, 4-17, 4-18
response, frequency 4-16
rewinder (RW-95) 1-11, 1-13, 3-29
roll around cart (RC-95) 1-11, 1-15
roll thermal paper, loading 3-29
RS (right side, datalogger) 3-85
<RS=-0200>* 3-85
RS-232 data port 1-2, 1-16, 3-14, 3-15, 3-20
RUN BNC connector 3-14, 3-15, 3-19, 3-22, 3-67, 3-81
RW-95 accessory 1-11, 1-13, 1-14

S

<S1 025/S>* 3-75
<S2 050/S>* 3-76
sample clock input 3-19
sample period 3-87
sample rate 4-22
sampling state diagram 4-14
sampling, waveform 4-13
SCN 2-3, 4-4
scrolling, recorder settings on front panel LED display 3-6, 3-48 - 3-51
SERIAL PORT receptacle 1-2,1-16, 3-14, 3-15, 3-20
SERIAL PORT receptacle pin connections 3-20
<SET X-Y>* 3-98
setting, IRIG DIP switches 3-18
setting real-time clock QG-7, 3-36
setting calendar 3-36, 3-37
setups, data-capture recording 3-91, 3-92
    acquisition setup 3-91 - 3-93
    playback setup 3-92, 3-94, 3-95
    trigger channel and location setup 3-95 - 3-97
    X and Y channel select setup 3-98, 3-99

S (continued)

setups, factory default real-time 3-41
setups, real-time recording 3-39, 3-40
annotation entry setup 3-40, 3-41, 3-47
channel order setup 3-40, 3-4, 3-53
communications type setup 3-8, 3-40, 3-41, 3-57 - 3-59
date setup 3-36, 3-39, 3-40, 3-41
event or annotation setup 3-40, 3-41, 3-45
factory defaults setup 3-8, 3-41, 3-60
grid printing on/off setup 3-40, 3-41, 3-54
insta-speed setups 3-40 - 3-42
motor speed source setup 3-8, 3-40, 3-41, 3-56, 3-57
setup summary 3-56
signal conditioner print status setup 3-40, 3-41, 3-52
snapshot sample rate clock setup 3-8, 3-40, 3-41, 3-60, 3-61
speed setup 3-40 - 3-42
time setup 3-36, 3-39, 3-40, 3-41
timed operation setup 3-40, 3-41, 3-43
setup summary 3-61
setup upon reciept 2-1 - 2-5
<SIG COND>* 3-52
signal-adjustment group 3-1, 3-2, 3-9, 3-10
signal conditioners, ASC-900 series 1-5, 1-11, appendix A
signal conditioner print status setup 3-52, 3-53
signal polarity reverse setup 1-9, 3-55, 3-56
<SING SS>* 3-100
<S/L>* 3-88
SLOPE switch 3-11 - 3-13
single snapshot, acquire 1-2, 1-4, 3-7, 3-90, 3-99 - 3-101
single snapshot, playback 1-4, 3-7, 3-101 - 3-103
snapshot, continuous triggered (Mode 3) 1-4, 3-7, 3-105 - 3-107
snapshot, continuous untriggered (Mode 2) 1-4, 3-7, 3-103 - 3-105
software configuration number (SCN) 2-3, 4-4
software package 2-3, 4-4
<SP00.00>* 3-44
speed, chart paper QG-8, QG-9, 1-2, 1-9, 3-5, 3-40 - 3-43
speed setup 3-42
<ST 00%>* 3-95
<ST00.00>* 3-44
<START>* 3-96, 3-97

S (continued)

start/stop, remote 3-14, 3-19, 3-67, 3-81
see also RUN BNC connector
start trigger 3-80, 3-95 - 3-97
stepper motor 4-7
strobe and strobe length 4-5
synchronizing the start of the system log 4-21
system control 4-1
system event marker 3-19, 3-80, 3-81
system log 1-7, 1-8
system log, synchronizing the start of 4-21
system memory, capacity 4-23

T

<T1 00.00>* 3-76
<T2 00.00>* 3-77, 3-78
"Talking" signal conditioner input 3-14, 3-17, appendix A
TC-2500 accessory 1-11
test and calibration diskette 1-16, 2-1, appendix D
thermal printheads, dual 1-1, 4-5, 4-6
thermal recording, principles 4-5
time and date, setting recorder's clock and calendar 3-36, 3-37
time annotation 4-19
time base 1-8, 3-91, 3-92
time codes, external 4-21
TIME key 3-3 - 3-5
timed dual-speed recording (Mode 4) 1-2, 3-7, 3-38, 3-72 - 3-81
timed operation setup 3-43 - 3-45
time setup 3-39
<TIMEROFF>* 3-43 - 3-45
<TIMER ON>* 3-44, 3-45
timer on/off (timed operation) 3-40, 3-41, 3-43 - 3-45
top of form (TOF) mark 4-9
trace, real-time waveform positioning 1-13, 3-9, 3-81
trace width 1-6
travel case (AN-95) 1-11, 1-17
<TR CH1>* 3-96
TRIG BNC connector 3-12, 3-14, 3-15, 3-22, 3-67, 3-72, 3-81, 3-100
<TRIGGER>* 3-75, 3-76, 3-78, 3-79, 3-97
<TRIG OFF>* 3-98

T (continued)

<TRIG ON>* 3-98
TRIG pushbutton 3-11 - 3-13
trigger (start, center, end) 3-80, 3-95 - 3-97, 3-101, 4-25
trigger channel and location setup 3-92, 3-95 - 3-97
trigger circuitry diagram 4-24
trigger definition group 3-1, 3-2, 3-11 - 3-13
trigger, external 3-67, 3-72, 3-81, 3-100
see also TRIG BNC
trigger lamp 3-13
trigger, manual 3-11, 3-12, 3-67, 3-71, 3-80, 3-100 - 3-102
trigger on/off setup 3-97, 3-98
trigger/window relationship 1-8, 3-91 - 3-97, 4-25
triggered dual speed recording 3-72 - 3-81
triggered snapshot 1-3, 3-11, 3-12
triggering 4-23
trimmer potentiometers, adjustment 3-22 - 3-24
TTL Low 1-7, 3-19, 3-22, 3-67, 3-72, 3-81
<T/W 01%>* 3-96, 3-97

U

<USE 2 CH>* 3-93
<USE 8 CH>* 3-93
untriggered snapshot (continuous) (Mode 2) 1-4, 3-90, 3-103 - 3-105
UTILITY PORT, rear panel 3-12, 3-14, 3-19
utility port receptacle pin connections 3-19

V

versions, recorder 1-4, 1-6
voltage, line 1-6, 2-3
voltage selection, line 2-21

W

waveform and grid 1-1
waveform sampling 4-13 - 4-15
waveforms, digital 1-2, 1-7
weight, recorder 1-6
window (trigger relationship) 1-8, 3-91 - 3-97, 4-25
window size 3-91 - 3-93
writing table (WT-95) 1-11, 1-14, 3-29
    installation of 2-17, 2-18
writing rate 4-18
WT-95 accessory 1-11, 1-14, 2-17, 2-18, 3-29

X

<X-Y>* 3-94
X and Y channel select setup 3-92, 3-98, 3-99
X-Y plot QG-12, 1-8, 3-94, 3-98, 3-99, 3-103, 4-25

Y

<Y>* 3-53

Z

ZERO control 1-13, 3-2, 3-9
Z-fold thermal paper 1-1
Z-fold thermal paper, loading 3-25

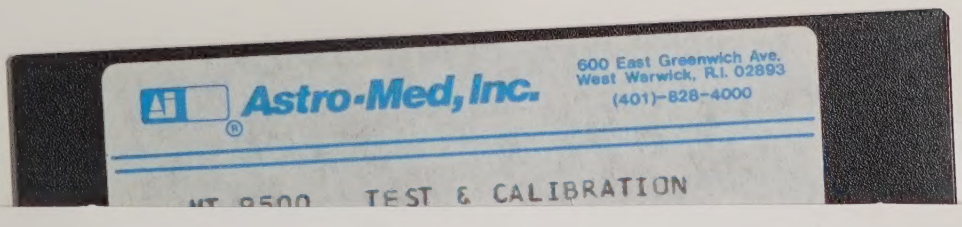
Astro-Med, Inc.
600 East Greenwich Ave.
West Warwick, R.I. 02893
(401)-828-4000
TEST & CALIBRATION

www.manualsplus.com
1015569